This is a digital copy of a book that was preserved for generations on library shelves before it was carefully scanned by Google as part of a project to make the world's books discoverable online.

It has survived long enough for the copyright to expire and the book to enter the public domain. A public domain book is one that was never subject to copyright or whose legal copyright term has expired. Whether a book is in the public domain may vary country to country. Public domain books are our gateways to the past, representing a wealth of history, culture and knowledge that's often difficult to discover.

Marks, notations and other marginalia present in the original volume will appear in this file - a reminder of this book's long journey from the publisher to a library and finally to you.

Usage guidelines

Google is proud to partner with libraries to digitize public domain materials and make them widely accessible. Public domain books belong to the public and we are merely their custodians. Nevertheless, this work is expensive, so in order to keep providing this resource, we have taken steps to prevent abuse by commercial parties, including placing technical restrictions on automated querying.

We also ask that you:

+ *Make non-commercial use of the files* We designed Google Book Search for use by individuals, and we request that you use these files for personal, non-commercial purposes.

+ *Refrain from automated querying* Do not send automated queries of any sort to Google's system: If you are conducting research on machine translation, optical character recognition or other areas where access to a large amount of text is helpful, please contact us. We encourage the use of public domain materials for these purposes and may be able to help.

+ *Maintain attribution* The Google "watermark" you see on each file is essential for informing people about this project and helping them find additional materials through Google Book Search. Please do not remove it.

+ *Keep it legal* Whatever your use, remember that you are responsible for ensuring that what you are doing is legal. Do not assume that just because we believe a book is in the public domain for users in the United States, that the work is also in the public domain for users in other countries. Whether a book is still in copyright varies from country to country, and we can't offer guidance on whether any specific use of any specific book is allowed. Please do not assume that a book's appearance in Google Book Search means it can be used in any manner anywhere in the world. Copyright infringement liability can be quite severe.

About Google Book Search

Google's mission is to organize the world's information and to make it universally accessible and useful. Google Book Search helps readers discover the world's books while helping authors and publishers reach new audiences. You can search through the full text of this book on the web at `http://books.google.com/`

School and Industrial Hygiene

Lincoln

371.7
L 736

371.7
L736

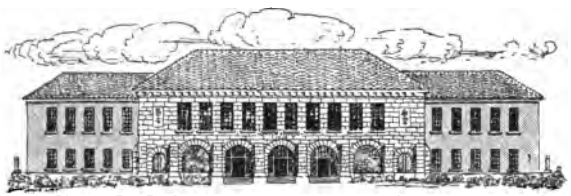

SCHOOL OF EDUCATION
LIBRARY

EDUCATION
BOOK PURCHASE
FUND

STANFORD UNIVERSITY
LIBRARIES

Hygeia.

AMERICAN HEALTH PRIMERS.

EDITED BY

W. W. KEEN, M.D.,

FELLOW OF THE COLLEGE OF PHYSICIANS OF PHILADELPHIA,
AND SURGEON TO ST. MARY'S HOSPITAL.

AMERICAN HEALTH PRIMERS.

SCHOOL AND INDUSTRIAL HYGIENE.

BY

D. F. LINCOLN, M.D.,

Chairman Department of Health, Social Science Association.

PHILADELPHIA:
PRESLEY BLAKISTON,
1012 WALNUT STREET.
1880.

LIBRARY
OF THE
LELAND STANFORD JUNIOR
UNIVERSITY.

A456?

COPYRIGHT.
PRESLEY BLAKISTON.
1880.

22-7-17-6

CONTENTS.

PART I.—SCHOOL HYGIENE.

CHAPTER.		PAGE
I.	General Remarks	7
II.	Emotional and Mental Strain	14
III.	Food and Sleep	19
IV.	Bodily Growth	24
V.	Amount of Study	28
VI.	Exercise	34
VII.	Care of the Eyes	48
VIII.	School-Desks and Seats	64
IX.	A Model School-Room	79
X.	Ventilation and Heating	85
XI.	Site, Drainage, etc.	94

CHAPTER. PAGE

XII. — PRIVATE SCHOOLS 98

XIII. — COLLEGES 102

XIV. — CONTAGIOUS DISEASE 105

PART II.—INDUSTRIAL HYGIENE.

I. — INJURIOUS EFFECTS OF INHALING DUSTY AND POISONOUS SUBSTANCES . . . 107

II. — INJURIES FROM ATMOSPHERIC CHANGES . 120

III. — INJURIES FROM OVER-USE OF CERTAIN ORGANS 127

IV. — INJURIES FROM ACCIDENTS 133

V. — REGULATION OF HOURS OF LABOR . . 136

VI. — DURATION OF LIFE IN VARIOUS OCCUPATIONS 142

NOTE 145

INDEX 146

School and Industrial Hygiene.

PART I.

SCHOOL HYGIENE.

CHAPTER I.

GENERAL REMARKS.

THE period at which we live is witnessing great changes in the theory and practice of education, from the lowest to the highest grades. The nature of the child's mind has been studied, his powers gauged, and his growth measured by a Pestalozzi, a Froebel, a Combe, a Chadwick, a Bowditch. Everybody knows that children do not like to sit still long at a time; that their minds easily wander; that they have an instinctive dislike to certain studies. This restlessness of mind and body, this dislike to certain mental foods, were regarded by the old masters as simply undesirable elements in character, to be curbed and chained, and overcome by force of dis-

cipline. The modern tendency is in a very different direction; it studies the natural behavior of children, and deduces from multiplied observations certain laws regarding their natural powers and aptitudes, to which all educational processes are subordinated.

To some extent the old masters were right; curbs have their use, and "old-fashioned" hard work ought not to be forgotten. Nor is the newer education free from grave faults of its own; or let us rather say, that right principles are not yet fully adopted by all. A great many teachers have found that emulation is a more than effectual substitute for the rod. This is one of the most characteristic of modern improvements; but its potency has no sooner been discovered than it is abused, and many a promising child, within the past thirty years, has wrecked his physical endurance for life, or has permanently enfeebled his mind by excess of study performed under the spur of emulation or an unregulated sense of duty.

No theory of education is satisfactory that does not claim the whole child. The State must leave a great many things to the parents in education; but it is her duty to attend to such things as parents cannot be made to attend to. Religion is a thing which the State does not try to teach, assuming that parents and churches can more safely attend to it; but morality must be taught at school. All schools assume

the immorality of falsehood and brutality, and the paramount obligation to perform school-tasks. It would be easy to take classes of ignorant, poor children, before they reach the age of street ruffians (which so many become after leaving the public school), and not only to show them, but to convince them of the necessity for truth, peaceable behavior, and respect for law, and of the necessary connection between duty or work performed and the prosperity of one and all.* In our public schools, I think this is hardly attempted. And yet, setting aside the moral, and assuming the sanitarian, ground as our sole basis, it is assuredly true that these branches of morals, and others that might be named, as punctuality, cleanliness, politeness, and faithfulness to engagements, are not things which can be neglected.

Again: the food and sleep of the child are mainly beyond the control of public schools. They are not wholly so, however; and it is a teacher's duty to discourage working in improper hours. Still more imperatively is it his duty to regulate the child's needs in school-time, to see if he is faint from want of food, to encourage and teach good habits, and to give opportunity for bodily exercise.

No lower aim should content the child's teacher than that of improving all his faculties and powers—

* For admirable illustrations of this kind of teaching, see George Combe's "Education," edited by Wm. Jolly, 1879.

bodily, mental, and moral. The teacher should feel his obligation to his school a patriotic one, as did the Athenian office-holder, who swore, "ἀμείνω παραδώσειν," to transmit the city over which he ruled better than when it was put into his hands; better in all respects.

It is my strong conviction that this can be done by the public or the State to a greater extent than is now accomplished.

The word "culture" is as badly abused to-day as the word "sentiment" was a century ago. For vast numbers of our people, the pursuit of culture resolves itself into the reading of books and the looking at pictures and bric-a-brac for the purpose of talking about them. We can easily widen this notion. The culture (or development) of children certainly means something better than this. But how much wider and better? It is preposterous to educate all children in all branches of knowledge. We are already trying to do too much in that direction; but it is equally preposterous to omit from culture the development of physical endurance, moral soundness, and a good practical judgment. In the case of myriads of poor children who leave school at the ages of ten or twelve, the opportunities for doing this are indeed limited—and are made so by our absurd practice of making excessively large classes; but the State should never lose from mind the object of training these

children up to *men* and *women*. As regards those whose education is superior and protracted, there is a full opportunity for developing *power* and *self-control*. How do we give a young man *power* to fight his way in the world? We put him into a school which teaches only the brain, and only a corner of that. When he is thirty years old, he will, assuredly, not be groaning that his tutors gave him but too imperfect an acquaintance with the Greek lyrists, or Visigothic numismatology; he will probably be wondering (if he is an active American) whether it pays to know all that; and at forty he will have discovered that the one thing which *does* pay in this life is life itself; that vital force and endurance and a good digestion are what are needed, as much as anything from books, to insure success in life. The President of Harvard College states this more strongly still.

The element of self-control and guidance, in culture, is quite as much a moral as an intellectual one. The boy is taught how to control his hand in writing or playing, his voice in speaking or singing, his organ of language in writing theses. He is not so taught in regard to the use of his moral faculties, his affections, emotions, and passions; nor is he shown how a want of self-control, whether in the form of caprice, indolence, good-nature, affection, or ambition, or even when veiled under the aspect of duty, may take away the half of the value of his talents

and knowledge. Perhaps these remarks would be more forcible if applied to girls and young women, in whom self-restraint is not commonly thought a necessity, and the feelings naturally take the place of reflection.

All that can be said against over-study must be reversed when we speak of moderate and rational study. Overwork ought not to be allowed, on the one hand; and on the other, indolence must not be permitted. It is little to say that study ought not to be allowed to injure the health. We may say much more: it is capable of improving health; and for many persons it is an indispensable means of health. A child who has been kept at suitable tasks unconsciously misses them when they come to an end. Civilized and reading beings (I assume that a civilized, awakened, informed, and interested mind is a desideratum!) must have something for the mind to work upon, or they fret themselves with ennui. Much study may be a weariness to the flesh; it may give dyspepsia by being allowed to encroach on physical duties; but when a person has learned to hold the proper proportion between these two, there is nothing that he finds more conducive to peace, satisfaction, and comfort. This pleasant result always follows when one has accomplished work which he is fitted for; and to deny an individual his intellectual exercise is as truly a damage to the body as is the deprivation of physical ex-

ercise. For want of accustomed mental stimulus and work, many a man (it is an old story) has found that his retirement from active business was his death-warrant.

School-life, however, *seems* to have some injurious effects on the health and growth of some children. Very often it is not the school that injures a child, but the fact that the child is living in a city and has no place to run out-of-doors. Very often it is not study at all that hurts, but study in hot or close or badly-lighted rooms; or study may be in excess of the powers of the system. Such points as these will receive our present attention.

CHAPTER II.

EMOTIONAL AND MENTAL STRAIN.

EMOTIONAL STRAIN.—Teachers are fully aware that this is a fluctuating factor in each child, dependent on the weather, fatigue, excitement, and other circumstances.

Of these circumstances, those which affect the *equilibrium* of power are among the most important. There is a large class of irregular mental or emotional states which are unfavorable to the complete health and steady activity of the mind. The so-called depressing emotions—timidity, despondency, anxiety, and discontent—often interfere with the mental health, producing actual and very marked lowering of the powers of execution. No scholar ought to be allowed to remain under the influence of them. It is the teacher's place to find out the cause, and remove it if possible. In a certain number of cases, they may be due to unkindness or neglect coming from the teacher or the playmates. A neglect to award merited praise either wounds or hardens the one who feels the injustice. Again, all these de-

pressed states may be simply a sign of over-work, want of exercise, bad air, want of sleep or food, etc.

A child must not be spared all that is irksome. Quite the contrary of this, the performance of irksome duty is one of the best lessons taught in school. But it is undesirable that he should feel the object of his study a worthless one, or should find his best efforts unsuccessful. I venture to suggest that, in these respects, the teacher needs as much of our sympathy as the scholar. Too much drudgery is laid upon her in correcting exercises, looking over examination books and papers, making up averages of marks, weekly and monthly reports, and other "school statistics." It is hard and unsatisfactory to have to give hours of the time needed for mental refreshment to the production of a few numerical results, which are probably destined to lie idle on a shelf.

Mental Strain.—There is a great deal of harm done by excessive urging or over-driving of children in school, as the reader must be aware. Yet, on the other hand, there are many scholars whose natures need this urging, and are not properly developed without it. If a given degree of "pressure" seems to the teacher's judgment moderate, how shall it be decided to be excessive by persons who are not witnesses? Who is a better judge than the teacher of

what constitutes a fair amount of work? In reply, it should be said that a parent knows more about a child, in the generality of cases, than a teacher.* It is a parent's eye that can best see when the child is "unlike himself;" and the parent is justified in feeling anxiety whenever the child loses sleep and the desire for food and play.

The means by which children are urged are well known, consisting of credits, rank, prizes, public exhibitions, and the moral influence of a teacher of strenuous disposition. It will not do to condemn all of these at once, for they have arguments in their favor. But, as a general thing, the giving of prizes, or at least public displays upon the stage, may safely be forbidden in the case of girls as useless, if not harmful. Their nervous system responds too quickly to such stimuli.

If there be novels which do harm "by giving false views of life," are there not schools for girls which do precisely the same thing, by the excessive importance which they allow the pupils to attach to a paltry gift, or, far worse, to success in beating rivals?

The scholar's future health cannot but be benefited by an effort to conquer indolence; but—to return to our chief point—children ought in some cases

* Especially if the child be one among fifty-six, who remain only five months with one teacher.

to be allowed to *seem* indolent, for reasons elsewhere indicated; and it is palpably unsafe to subject all scholars to an equal pressure.

"Over-driven" children will often study late and sleep poorly; they then rise late, dress in haste, and rush for school in dread of a mark for tardiness, often not pausing to sit down at the breakfast-table. They thus enter on the day's work with an exhausted and irritable system, which does not have a chance during the forenoon—so taken up is it with school-thoughts—to remember its need for repair and rest. The luncheon-basket probably contains food suited to attract a jaded system and to produce dyspepsia—cake and pie and doughnuts. The child finishes the school-tasks, and goes home with an armful of books and an aching head—in need of food and rest and play, but hardly aware of either, and intent simply on learning the next day's lessons. There is no recovery from this strain, for the lessons are not learned until bed-time, when the experience of the day before is repeated, and so on day after day until the fixed term expires.

This over-work is unfortunately apt to occur at the very time of the year when the system is least able to bear it. The "exhibitions," the closing examinations, and the stress of the struggle for prizes, come in the months of April, May, and June, when the body craves fresh air and the eyes long for green

fields; when, too, the powers of the system begin to flag from the withdrawal of the stimulus of cold, which has kept them strung up to a higher pitch all the winter. This constitutes a very serious objection to the present system of school-exhibitions. It is needless to say that teachers are not exempt from this strain.

CHAPTER III.

FOOD AND SLEEP.

THIS is the place to finish what needs to be said regarding food and sleep.

The logical connection is quite obvious. Study is a consuming of certain materials contained in the brain and the blood; food and sleep are the means by which this loss is made good, and the mind placed in a fit condition to resume work. The system of a child who is studying to excess is becoming exhausted; it loses its powers in various directions; the muscular endurance may be enfeebled; the digestion is very apt to fail; appetite for food is lost, with the power to digest food; and sleep is very apt to be poor. It is pretty safe to say that a child who eats and sleeps well is not much over-driven. There is a natural antagonism between active study and active digestion. A nourishing meal indisposes a healthy person to active mental exertion; and, *vice versâ*, active study or mental excitement takes away appetite, or at least enfeebles the digestive power for a time. What we say of hard study is equally true of hard play. After

hard study or play there should be an interval for relaxation or cooling-down before a meal is eaten. Nothing could be more injudicious than a programme which allows only one hour for dinner, following a forenoon of study, and followed by an afternoon of study. If it be thought desirable for young adults to make the day as full as possible, it will be much better to have an intermission of two hours at noon-time. And persons not adults should always obey a rule which places an hour's interval between dinner and study, and at least half an hour between breakfast or tea and study. All the meals must be nourishing, and stimulants, such as tea, or coffee in particular, should form no part of them. If the proper amount of sleep is had, there is very little time for study in the evening. The child should sleep ten hours at the age of twelve years; nine hours at the age of fourteen or fifteen; and eight hours at the age of seventeen or eighteen. It is not necessary that he should indulge in the habit (salutary for many adults) of taking a nap after meals.

At the "Smith College," at Northampton, Mass., the young ladies are expected to be in bed at ten o'clock, and are strongly advised not to rise before six o'clock. The students are of the usual "college age," say from eighteen to twenty-one.

Study or exercise before breakfast is not generally to be allowed; it will do harm to many children.

Excessively long intervals between meals are of course to be avoided, or to be broken by solid luncheons. If the above amount of sleep be allowed, there will not be time for more than three regular meals and a lunch.

Late dinners are apt to interfere with children's sleep; if, for instance, the family meal is from six to seven, and the children go to bed from eight to nine. A hearty, comfortable dinner about the noon-time is much better. It is perfectly true that the afternoon session is likely to be rather a sleepy one; this should induce the judicious teacher to shorten the session, and to prefer manual tasks (writing, drawing, etc.) rather than those that call for thought. Afternoon lessons add very little to the child's stock of knowledge.

Is there an antagonism between food and study? Is the mind paralyzed by the contact with the gross material aliment? If it be so, why not make the practical inference, and reduce the amount of food in order to study better? This proposition, insane as it looks to one who understands the physiological law of our living, is no doubt seriously acted upon by many ambitious scholars. To such I would say—though with small hope of being heard—that it is no disgrace to the mind that it is attached to a body. Its Creator has willed it so, and for this life it must be so. To give a body insufficient food, and to exact a full task from the brain, is slow suicide. The nour-

ishment goes to the brain, while the rest of the body grows puny, and the foundation of slow diseases, such as consumption, is often laid. True, there have been men and women with whom sedentary habits and a spare diet have agreed perfectly; but with most men and women the result is dyspepsia, melancholy, and a tendency to consumption or insanity; and as to children, or persons under twenty, a sedentary life with spare diet is a pure absurdity. There are telling maxims, indeed, insisting that we should rescue hours from the night and add them to our lives, and comparing sleep to death:

"Stulte, quid est somnus, gelidæ nisi mortis imago?"

but, before you acknowledge their force, go and look at the sleep of a healthy child. If you are alarmed at being drowsy after eating, recollect that the brightest fire is dulled for a little while after fuel is put on.

In connection with institutions for large boys and girls,—"colleges," as they are sometimes called,—it may be desirable to establish a cheap lunch-counter, which furnishes an inducement to eat solid and wholesome food rather than a stale mess brought from homes at great distances.

Americans, in general, eat a great deal of trash. They are brought up to it. The subject is rather a wide one, but it may be of service to indicate what is not trash: A plenty of roast and less of boiled

meat; a few soups made *secundum artem;* a fair variety of plain vegetables; an occasional treat of the best fruit, with abundant supplies of apples; good bread of more than one sort; a daily and abundant ration of the simplest and most strengthening food, such as oatmeal or Indian-meal mush, with milk; and, for drinks, water, milk, coffee which contains as little of the original bean as possible, tea that is not too strong, or diluted cocoa. Such a dietary, without the compounds commonly used for dessert, but aided by fresh air, sunlight, and plenty of play, makes healthy children. Fish and eggs and milk are also necessary, but should not be eaten under the impression that they "make brain."

The boarding-schools of our country have a great opportunity for implanting habits of simple and wholesome living. If such schools furnish unwholesome diet, they do it in imitation of the ordinary habits of society. In a well-conducted school, on the other hand,—where enough of the best and simplest is given,—it is not uncommon for pupils to come from the indulgences of home and holidays dyspeptic and flabby, and to become brighter and stronger as soon as they are subjected to the regimen of school.

CHAPTER IV.

BODILY GROWTH.

IF youth be a formative period, whose product is simply the adult person, then, surely, that period when formation is most rapid,—when a new being *par excellence* is developing,—deserves the greatest respect and care. In the case of boys, growth goes on at a nearly uniform rate until manhood. Girls, however, concentrate a great deal of growth in a few years. They are shorter and weigh less than boys until the age of eleven or twelve, when they suddenly shoot beyond them, and, for about three years, continue decidedly taller and heavier, after which they resume the former relative position.* It would seem reasonable to suppose that girls at this age are less capable of mental application than boys; for it is a general rule of Nature, that when a great demand is made on the system by one set of functions others must remain in comparative abeyance,

* Prof. H. P. Bowditch, in "Eighth Annual Report of Massachusetts State Board of Health."

and that when growth is very rapid, mental action is proportionally less so. If girls are often found quicker and brighter than boys at this age, it may, nevertheless, be questioned whether it is right to allow them to come in competition with boys; for pluck and vivacity are not, necessarily, evidence of power.

After this age — that is, about fourteen and fifteen, in most cases — comes the time when girls are undergoing a change which affects the whole system in a different way from mere rapidity of growth, — a change which, if effected quietly and normally, may be said to have laid the foundation of the happiness and health of an entire life. At this period, if at no other, a girl should be protected from the excitement of "society" and late hours, and should receive the support and steadying which regular habits of study impart. It is a more directly practical thing to say that she ought to be treated with leniency at certain times; her work should be lightened, her errors excused, her inattention or unreadiness overlooked, and absence from school allowed if requested.

Many young girls have grown up to be strong and useful women, and have never been aware that their mental powers were less under control than those of boys of their own age, — their school-fellows, — or that there was any physical necessity for their studying less than, or differently from, their brothers. Especially

is this true of country girls brought up without the excitements of society.

The late Dr. E. H. Clarke, of Boston, was of the opinion that our system of public school education was ruining the health of vast numbers of young women, by compelling them to study to excess, particularly at the monthly period. His opinion was vigorously stated in a little book, published a few years since, entitled "Sex in Education." Equally vigorous counter-statements were made in the books called "Sex *and* Education," "No Sex in Education," "The Education of American Girls," and in other places; and quite a salutary storm arose, which has resulted, it may be hoped, in leaving the public impressed with the importance of the subject, if nothing more.

I would here refer the reader to two of the following chapters—that on Amount of Study and that on Exercise. It seems to me fair to say that the growing girl would not generally suffer from her studies if they were restricted within the limits hereafter suggested, and if her physical development were cared for properly. A healthy girl—such as nine out of ten ought to be—need not suffer in health from regular attendance on school for three or four or five hours a day, *if she is protected from "society" and given a fair chance to grow strong.* The harm is done when a girl goes to the theatre or concert, and

appears the next morning in school with a worn and tired look and two great circles around her eyes. The harm, indeed, is done long before, when she first comes to live in a city where public parks are thought unsafe for her to walk in, and where *play* in the open air (except for "children"—that is, very small girls) is an impossible or a forbidden thing. It begins with that substitution of artificial for natural enjoyments, of society and its excitements for sports, of adult for childish interests, which is characteristic of city life. Many such girls are thought to be overworked if they lose their color, while studying four or five hours a day, at the age of fifteen.

CHAPTER V.

AMOUNT OF STUDY.

EXCESS of mental application is any amount which interferes with the vegetative functions, *i. e.*, anything which, by its intensity or long continuance, or by any peculiarity of its own, interferes with digestion, sleep, nutrition, repair, or development.

As the reader is perfectly aware, the cell-structure called brain is in need of constant repair, equally with other structures; and this repair is effected by processes termed "vegetative."

Muscles, stomach, and brain equally require vegetative activity in order to keep them in condition; and each may suffer from over-activity without impairing the health of the others. But, in general, overwork of one tells disadvantageously upon all, and an unsound or overburdened mind is apt to act like a burden upon the body.

The amount of work to be assigned must be determined empirically, and we have no right to say of a given person, in advance of experience, that he is capable of doing a certain amount of work. But we

can, as the result of experience, give an approximate statement of the amount which is suitable to the average person at a given age.

As has been said before, children can be aroused by modern methods to a great spontaneous activity of mind, which contrasts strongly with the listless and reluctant attention of old-fashioned schools. The effect is obtained by adapting the instruction to the child's capacity and nature. The kindergarten system is one of the most striking instances of this. I do not mention it either for praise or blame, but simply in order to point out the fact that, under the most favorable circumstances—cheerfulness, pleasant and varied tasks, sympathy, and wholesome surroundings—a child at the kindergarten age has not the power to bear more than two or three hours of these tasks in a day consistently with health. If pursued longer, the work becomes too exciting.

The late Mr. Edwin Chadwick, of England, is the chief authority for a definite statement of the number of hours that a child should be allowed to do school-work. His statements are based on long and patient observation, and numerous inquiries made of teachers whose attention was especially called to the point; and I do not think that any one has seriously attempted to refute his views, which were published a number of years ago.

In the first place, he points out the obvious inabil-

ity of the little child to pay attention for a length of time consecutively. The mind, like the body, must be in a continual change; the efforts made must resemble play in spontaneity, rapidity, and variety. Sedentary occupation is an enforced necessity with most adults, to some extent; but it is always to be considered as involving possible danger, and for a little child is almost out of the question. His brain is imperfectly developed; the power of attention is perfect, but incapable of sustained efforts; the mind refuses to work long in one direction, as the body refuses to stand or sit still. There are certain classes of work which are utterly beyond his power; and yet there is no doubt at all that a little child learns as much, if not more, in a year as an adult student. But he learns it in his own way, and it is not book knowledge.

Let the adult reader try to attend to a new subject; let him take, for example, a treatise on metaphysics, or anatomy, or vital statistics, or a "Student's Gibbon," or some other work which demands close attention; let the work be unfamiliar, not beyond his comprehension, not too interesting, and let him see how soon his mind begins to flag in the effort to master the text, as if it were a lesson to be recited. He will find, perhaps, at the end of an hour, not that the subject is merely uninteresting, but that his mind does not take hold of it as sharply as when he began;

perhaps, if he is "tough," he can stand two hours. This, by the way, is quite a different thing from an irresponsible, leisurely reading of the brilliant narration of a Parkman or a Froude.

If an adult can apply himself to the acquisition of knowledge in one direction for only one hour (and how much longer can an audience listen to a lecture?), the child can evidently do very much less. At the age of from five to seven he can attend to one subject—a single lesson—for fifteen minutes; a child from seven to ten years of age, about twenty minutes; from ten to twelve years, about twenty-five minutes; from twelve to sixteen or eighteen years, about thirty minutes. (Chadwick.)

The total of daily work corresponds with the limits of a single effort. Ten hours' work is a maximum average for young men; and there is a regular gradation from this down to two and a half or three hours for children under seven.

The most vigorous and healthy young men are selected for West Point, and they are severely winnowed by the work required of them. They are excluded from dissipation and general society; their active bodily exercise, their regular diet and sleep, and the healthful climate of the place, leave nothing to be desired. They have ten hours a day for the six cold months; in summer much less. In our colleges, where the students are not picked for their physique,

the average actual work (study and recitation) among those who are faithful to their work will not probably exceed eight or nine hours, as far as my observation goes.

In high-schools, during the period of rapid growth and sexual development, a lower figure must be assumed; and it seems certain that five hours, or, under the most favorable circumstances, six, are all that should be required. The ages usually range from twelve to seventeen.

Below the age of twelve years, four hours are probably sufficient; below ten years, three or three and a half; below seven years, two and a half or three hours.

In England a very large number of children (over 100,000, at my latest information) are sent to school on the so-called half-time plan. This plan is the result of an attempt by the Government to suppress the evils of juvenile labor in manufactories. The children attend school about three hours a day during the school-year, and those hours are taken out of their factory-time. It is found that children thus taught make as good progress as those who attend school six hours a day. This result is probably a mixed one, due, partly, to the beneficial effects of change of occupation, and partly to the fact that six hours are clearly beyond the limit of profitable mental exertion. Something must also be ascribed to the

regularity of attendance in half-time schools, which is enforced under the penalty of exclusion from the factory.*

At what age should a child be sent to school? The kindergarten does not injure a child of four years unless carried to the point of over-excitement, which, I believe, is not often done. The common primary school, however, is decidedly objectionable. It takes very young children (six years of age), and compels them to remain twice as long as is good for them. By great ingenuity and vivacity, a teacher can keep them going upon various *studies* for three hours. This is all that is reasonably possible, yet the children are expected to come back for a second session in the afternoon. A school conducted by set lessons and recitations — a mimic grammar-school, in fact — should not receive children under seven or eight years of age.

* See Reports of the Massachusetts Bureau of Labor for 1871, 1875, and 1878.

CHAPTER VI.

EXERCISE.

IN spite of all that may be justly said of the value of intellectual pursuits in promoting health, it remains true that a great many brain-workers are exposed to a serious danger. The effects of unrelieved work with the mind are not always easy to trace. In the case of teachers, the system gets so gradually used to a low tone of physical life that one forgets the sensation of health, loses a standard for self-comparison, and does not become aware that ground is really lost until matters are already serious. To a person in vigorous health, with strong muscles, who feels his temper and digestion giving way under the influence of teaching, heavy gymnastics or field-sports of an active sort may be recommended. To the less vigorous or muscular person, and to most women who teach, a daily walk of from half an hour to two hours is necessary. It should be taken in company; care should be left at home; new scenes sought, and the object should be less to get fatigue by great exertions than to give the mind an oppor-

tunity to take a view of life which school-work does not give. One chief benefit of walking is that it breaks up trains of thought.

It is certainly worth while for women to cultivate muscularity, if they can do so with safety. A great many could walk five miles a day, and be the better for it; others could not: and the way to find out is by trying. Beginning with two miles, one may gradually work up to five in the course of five weeks. Perhaps it may be necessary to restrict the amount; but this must be learned by trial.

Some persons, especially teachers, ought to enjoy almost *absolute* rest on Sundays. Few are really aware of the value of the Sabbath as a physical agent of health. The teacher should so use it as to get a sense of renewed life every Monday, and, unless in most vigorous health, should certainly not teach in the Sunday-school.

It is difficult to state with accuracy the precise time when the frame of the body takes a permanent form; it certainly varies in different cases; but it is plain enough that there is a great difference between the years before twenty and those after. The requirements of a growing body, it cannot be too often repeated, are very different from those of an adult body. We urge gymnastics upon the adult in order to preserve the constitution; upon the child, in order to form it. Circumstances often forbid the systematic

pursuit of gymnastics by adults; children have, or should have, no engagements or occupations to interfere with it.

The benefits of gymnastics are of several sorts. Children are not to practise them chiefly for the sake of gaining great strength. They are to be used as a means of conferring grace of movement and the outlines which indicate health and endurance; of enlarging the chest, thereby giving free play to the act of breathing and the motion of the heart; of strengthening the latter organ by degrees; of fortifying the muscular walls of the abdomen against rupture and the joints against accident; of confirming the habit of liberal consumption and ready assimilation of food (though play is better for this object). All these are best attained by the use of few and light apparatus; at least, in the commencement.

The word "calisthenics" implies the imparting of strength and beauty. There is a proverb that "beauty is but skin deep;" a very *superficial* view, indeed. Beauty of form is not skin deep; it depends on the bony frame, on the development of muscles over the bones, and on the fatty layer over the muscles. A straight back may be said to be an element of beauty; round shoulders and a twisted spine are an element of the opposite quality, beyond a doubt.

It is well known to physicians that a large number of young girls in cities have a perceptible tendency

to distortion of the spine at the growing period of life. The case is certainly aggravated by confinement in school, by want of muscular exercise, and by improper positions in study. Boys do not exhibit this tendency to so marked an extent; but it is a thing to be constantly looked after in the case of girls.

"In a school of 731 pupils at Neufchâtel, 62 cases of deviation of the spinal column were observed among 350 boys, and 156 cases among 381 girls. These results are further stated not to differ materially from those of examinations made in German schools. According to Adams, in 83 per cent. of 782 pupils (649 cases), in which this deviation occurred, it was towards the right—probably in consequence of writing at unsuitable desks. According to Eulenberg, in 92 per cent. (276) of 300 cases, the curvature was also to the right. It is true that these curvatures are not always associated with public health, since they sometimes occur in a slight degree to the strong and well; and it is true, also, that they may arise under influences not peculiar to school-life, such as the preponderating use of one or the other arm for any purpose. There can be but little doubt, however, that to the habit of writing at unsuitable desks belongs the largest share of blame.

"In the statistics which I have given, the spinal curvatures were found to occur with much greater

frequency among girls than among boys, partly due, no doubt, to the fact that they play fewer active games, and are, in general, more restrained in their movements. In a brief report of a recent meeting at Berlin, of some of the highest authorities of Germany, called together to consider the entire subject of the school education of girls, I find a notice of an address by Herr Raaz, principal of a school in Berlin, in which he speaks of the common occurrence of these spinal curvatures in his school, and says that he has found the use of gymnastics to be powerful in preventing them."*

Children should have several hours of play every day in the open air, when possible. Vigorous and spontaneous action of this sort is better than gymnastics for the general run of children; and if girls were allowed by social feelings to play as boys do, they would cease to be so subject to spinal deformities.

But a certain proportion of children are not suited by indiscriminate play. They have a tendency to distortion of the spine, which is easily brought out by many forms of sport.

Any exclusive use of one side of the body is therefore dangerous. Base-ball is a vigorous and useful sport; but it is occasionally the cause of lateral dis-

* James J. Putnam, M.D. "Gymnastics for Schools," in the *American Journal of Social Science*, No. VIII., 1876.

tortion, owing to the excessive use of the right arm and hand. Bowling would seem likely to have the same tendency. Croquet is a very distorting game, unless both hands are used alternately, or one as much as the other, to strike the ball.

The position of a woman on horseback is one which is apt to cause a "corkscrew" twist of the spine. And the common games of running and tossing, which do children so much good, are not so *directly* adapted to prevent or cure spinal deformity, or to make a girl full-chested and symmetrical, as is a course of gymnastic training under the charge of a competent person.

Evidently, if we accomplish this greater object of correcting the weak points in the frame of a child, we gain at the same time those benefits — improved appetite, complexion, sleep, mental briskness — for which adult gymnasts so much prize their art. As for play, *when* can the girls in a city boarding-school, for example, *play?* Certainly not while on their daily walk, two by two, in the paved streets.

"To establish a department for physical training demands but little change in the present school system, since almost any school-room may be transformed almost instantly into a gymnasium, no apparatus being required for the lower grades, and only a few light implements carried in the hands for the more advanced pupils, and each scholar needing only

space enough upon the floor for a step in each direction, and room to straighten the arms in front and at the sides. Of the pupils the requirement is slight, being merely that the dress shall be short enough to leave the feet unencumbered, loose enough to admit of a full inhalation without feeling the clothes at the waist or across the chest, and large enough to permit the free play of every muscle in the body. For this no special costume would be required, except in the highest grades. Music is a great addition to the exercise, but not a necessity. But the great difficulty, and, in fact, the only serious one, is the dearth of regularly trained teachers of gymnastics, who are not only fully prepared for the work, but who are enthusiastic in the cause, and able to impart their information to others. This arises from the low standard of physical culture admitted by public opinion. Let it once be required, that those who teach this branch shall of necessity be regularly trained, and there will be a supply of good teachers in a marvellously short time." *.

"In Sweden, the celebrated system of Ling is an obligatory study in all public schools, three to six hours a week being devoted to it, subject to the advice of a physician, who is appointed to examine each scholar at the beginning of the school term. For the

* Quoted by Dr. Putnam from a letter received from a teacher of gymnastics in a "girls, normal-school."

education of teachers there is a great central institute at Stockholm; and the graduates from the normal-schools must moreover have passed a special examination in this branch. A large part of the instruction is in the so-called 'free exercises,' including proper methods of sitting, standing, lying, walking, running, jumping, as well as exercises in concert, games, etc. The aim of these free exercises is to call into action in turn the greater part of the voluntary muscles of the body; and with an intelligent, earnest teacher to direct them, there is no end to the modifications and combinations that can be made, calling for precision and strict attention and skill on the part of the pupils." [*Ibid.*]

The city of Frankfort-on-the-Main is an illustration of what may be done by an enlightened community, led by far-seeing hygienic genius. Gymnastic exercises were first introduced there nearly seventy years ago; but the progress has been very slow indeed, and it was only a few years ago that the regular practice of such exercises, under trained teachers, was made obligatory upon the public-school children in that city. Most of the twenty-five schools already possess a "turn-halle," and others are building. The new halls are to be from 20 to 25 meters long (66—83 feet), 9 or 10 meters wide, and 5—5.6 meters high (about 17—18 feet); they are all well furnished with

apparatus; that used by girls differs somewhat from that used by boys.

There were 12,101 children in the public schools in 1878, of whom 10,844 attended schools where gymnasiums existed and exercise was obligatory. A medical certificate of disqualification is required of those who are excused; the number wholly excused amounted to two and a half per cent. The scholars exercise two hours every week. They are always under the charge of teachers specially qualified for the work by instruction received in gymnastic normal-schools, and in classes taught by the inspector of gymnastics. These teachers are not ignorant men, nor "pure specialists" of gymnastics; they are all regularly qualified teachers of the literary branches, and the hours during which they are engaged in teaching gymnastics are counted in with the twenty-six required weekly hours, just as so many hours of Latin or music would be counted. One hundred and fourteen teachers are thus employed, performing an amount of duty equivalent to the *full time of seventeen teachers;* which may be estimated as costing the city 46,270 marks, or about one dollar for each child. The value of this exercise to the teachers is as great as to the pupils.

It is thought desirable that the number of weekly hours should be increased. Another recommendation is made by the authority from whom I quote

this account,* to the effect that the city should provide public places for children to play in, both for sanitary and moral reasons—a recommendation which is as important in America as in Germany.

It is interesting to remark that the youngest children use chiefly free-hand exercises; that the boys take the fixed apparatus by degrees, and at last use them chiefly; while the girls, who in the middle classes use fixed apparatus like the boys, in the upper classes return, for the most part, to the use of lighter instruments, suitable for young children.

Public sentiment is not at present favorable to such thorough-going work in America. To the crowds of men and women in our large cities who were born in the country, and remember its free and natural sports, its days spent in the open air with the beasts, fowls, and fishes, a course in gymnastics will seem but a tame thing. Those city men who have been forced to use a gymnasium for their health, have not generally a very cheerful impression of the place. In fact, the actual substitute, in our cities, for that immensely popular German institution, the Turn-Verein, is the volunteer militia company, which gratifies the love of exercise, the social instinct, and the love of rule, order, and co-operation in a very similar way.

A gymnastic class in a school should consist of the

* G. Danneberg: Das Städtische Schulturnen zu Frankfurt a. M.

scholars in one room, or any suitable fixed number; their teacher should have precisely equal authority with their class-teacher (in Amherst College, the teacher is a Professor and member of the Faculty); and the exercises should be controlled as those of a soldier are — not with the same stiffness, but with constant care lest the boys injure themselves by ambitious efforts.

Even in Frankfort, the present complete system has only been introduced in the most gradual manner. If it is ever made a part of the American system, — and I cannot see why it should not ultimately be, — the same way must be followed. I would suggest, as a stepping-stone, the introduction of a very thorough gymnastic training in our normal-schools. In three years, a young woman cannot only much improve her own constitution, but can become impressed, from experience, with the value of gymnastics. The great difficulty to be overcome is the fact that few teachers really know what physical exercise can do for a person; what elasticity and smoothness of temper; what power of continued attention and work it is capable of imparting.

Girls really need gymnastics more than boys, in cities, owing to the very great restraint placed on their freedom, and the improper modes of dressing which still prevail. One of the readiest ways to persuade young women to dress rationally is to make

them feel by contrast the comfort of living in bodily freedom, as must be done, for the time, at least, by those who practise gymnastics.

Would it be too great a luxury for a democratic community to indulge in, if all children were inspected by the quick and practiced eye of a medical expert, once a year, especially during the ages of rapid growth? and if the results of such examinations were made known to the teachers of gymnastics for their guidance? In every hundred children, there are always some who are tending to special deformity. It would be very easy, in most cases, to prevent this by suitable exercises, performed with very cheap apparatus, for a short time, every other day. Other children are weakly, and should have special exemptions.

The adoption of *special teachers* in gymnastics is strongly to be urged. It is too much to expect of the literary instructors that they shall always be strong enough to perform the severe duties of instructing in *gymnastics* three times a week. Such duties are much more toilsome for the teacher than for the pupil. There are plenty of most valuable instructors who could not bear the additional strain. But as regards *calisthenics* of a very light description, performed daily once or twice, for relaxation more than for development, the ordinary teacher is per-

fectly competent to perform and teach them. I will give a specimen of the latter to illustrate:

"Body erect, heels together, feet at angle of 60°, chin not protruding, eyes front, hands closed, knuckles touching shoulders as nearly as possible, elbows touching sides with exactness.

"Right hand *down, up, down, up;* left hand *down, up, down, up;* right *down;* right *up* and left *down;* right *down* and left *up;* right *up;* both *down, up, down, up* (16 movements).

"The same alternation may be applied to forward movements resembling a boxer's blows, and to lateral and upward movements. This series is one of the most elementary, and when learned so that the whole class does it with prompt uniformity and in good time, — the music, if possible, of a piano or drum,—a slightly harder series may be undertaken. This course will bring into use, by degrees, all the chief muscles in bending and twisting the trunk, limbs, and neck."

Military drill is an excellent thing in general; it should, however, be restricted to the stronger boys. Small and weak fellows are easily injured by carrying a musket for a long distance. My friend, Dr. Buckminster Brown, has mentioned to me one or two cases in which he believed congestion or inflammation of the membranes of the spinal cord at the level of the shoulders to have been thus caused.

In a long session, there should be a pause at the

close of every hour, in which the scholars should be allowed to go out of doors.

A short session of three hours may require only one pause, which should, however, be of twenty or thirty minutes, in the case of children.

Clothing should at all times be easy and allow full inspiration by chest or abdomen, without any sense of pressure; the feeling should be nearly the same as when no clothes are worn. The so-called "dress reform" for women effects this by making most of the weight depend from the shoulders.

One of the chief faults of feminine attire — the pinching of the waist where the skirts are fastened — is imitated by boys with a leather strap. It is dangerous to exercise with a tight strap or string around the middle.

The feet are often neglected. Children (old enough to "study philosophy") will come to school in thin, wet shoes from simple negligence, or because they have "lost" their rubbers. They should be sent home by the teacher for dry shoes and stockings. On very wet days it would not be amiss for the pupils to bring at least a dry pair of stockings to school with them. This is especially important for older girls.

CHAPTER VII.

CARE OF THE EYES.

THERE is no hygienic point where the teacher can render more distinct service than in relation to the eyes of his scholars. The functions of this organ are so dependent for their perfection upon a thoroughly sound condition of health, that a complete account of their relations would bring us in contact with most points of hygiene. But, of all public servants, the teacher ought to be best informed of the dangers, and best able to assist the child in avoiding them.

In the valuable little treatise on the "Care of the Eyes," by Mr. Brudenell Carter, we find these words, which may be laid to heart :

"It is very worthy of note that, in the experience of ophthalmic surgeons, it is exceptional to meet with a child suffering from defective vision who has not, before the defect was discovered, been repeatedly and systematically punished by teachers or schoolmasters for supposed obstinacy or stupidity. The very reverse of this practice is what ought to obtain,

and apparent obstinacy or stupidity should lead, from the first, to the question, 'Can you see perfectly?'"

It may be added that deafness, due to causes easily removed if taken in time, is often misunderstood in the same deplorable way. Deafness, however, cannot be considered a "school disease" in the same sense in which many diseases of the eye are such. Both the eye and the ear, however, are peculiarly the instruments of school-education, and a teacher who is ignorant of their essential construction and laws knows not the tools of his trade.

There is one affection which is so common, and so directly dependent (in many cases) on school-life, that it may well occupy our first attention. I refer to short-sight, near-sight, or myopia.

A child with normal eyes ought to be able to read this page, in a good light, at the distance of forty inches, and at all intervening distances down to four inches: this is a very moderate test for young eyes. Any child who cannot read it as far as fifteen inches off should have his eyes examined by a competent oculist. No disease is more certain to increase if neglected, and none is better understood by scientific experts, and more susceptible of exact statement and ready correction.

The near-sighted eye is one which has too great a diameter from front to rear, so that the retina—which lies at the rear—is beyond the point at which pencils

of rays from *far* objects are focalized. This condition is illustrated by the following diagram from Dr. Harlan's Health Primer, in this series, on "Eye-sight, and How to Care for It," in which the whole

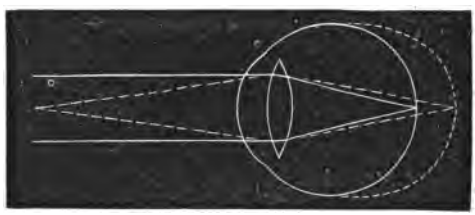

lines represent the outline of the normal eye with the lens, and rays of light from a distant object coming to a focus on the retina; while the dotted lines represent a near-sighted eye, with rays from a *very near* object coming to a focus. In near-sightedness, rays from distant objects may be represented by the whole white lines, which are focalized before reaching the retina, giving a diffused image, in which each point of the object is seen as a larger blurred point and each line as a wider blurred line.

This defect is irremediable when it exists as an anatomical fault; but very much may be done to prevent its increase when discovered, especially in children. It must be remembered that some children are looked upon as near-sighted because they have the habit of holding their work too close to

their eyes. This habit may arise from the very opposite cause, namely, far-sight; it may originate in sheer indolence, a faulty desk or seat, or poor light, and may be continued merely as a habit. And the degree of near-sight is easily over-estimated by those not able to apply the scientific tests of the professed oculist; for in many cases there exists a temporary exaggeration of near-sight, due to the strain entailed by the effort to read or see fine objects, which easily passes away with change of occupation.

In order to prevent, we must first understand something of the causes of this complaint.

There is a strong tendency for the malformation, once developed, to be transmitted to children. In all probability, near-sight begins, in many children, at a very early age; but in most cases a great deal can still be done to prevent its increase.

It is believed that an eye which is predisposed to near-sight has naturally a more yielding and delicate envelope, which, under the influence of close application to near vision, yields to the compression which that act necessarily causes (and causes, also, in a sound eye); and as the yielding occurs chiefly at the rear of the eyeball, that portion is very gradually pushed back, and the whole globe becomes elongated.

This tendency to yield may exist as the result of three causes: first, as an inheritance from near-sighted parents; second, as a characteristic of weakly, flabby

children, with tissues which do not resist pressure well; and, third, as a general characteristic of childhood, when all the tissues are soft.

Of prevention, as applied to the first of these causes, I will not speak; but the second is at once suggestive of the great importance of preserving strong and lusty health for the sake of the eyes; and as to the third, it affords a hint that childhood is not, perhaps, a suitable time for close application with the eyes.

Robust and active children are less likely, on the whole, to be affected, both because their tastes lead them into the open air rather than to books, and because they generally possess a tougher fibre. Anything which depresses vitality is capable of weakening the power of vision. Bad air in school-rooms is certainly capable of causing bad eyes; it provokes the general condition of listlessness and languid function which predisposes to near-sight and other diseases of the eye. Fresh air in the school-room is absolutely necessary for this reason. Delicate health, dyspepsia, catarrhal, and other weaknesses may be considered as aiding the tendency to near-sight. Convalescence from acute fevers, as measles, is often associated with a weakness of the eyes which should forbid their use for a time. Diphtheria not seldom causes a paralysis of sight, which should be very carefully looked after both by teacher and doctor, and all use be prohibited until complete recovery ensues.

It is a false and mischievous view that considers the near-sighted eye a strong eye. Such an eye is "strong" only in respect to minute objects, while, for almost all the pleasures and duties of life, it is a half-blind eye. There is, too, a tendency, happily seldom realized, to destroy sight by separation of the retina from the outer coats of the eye — a painless process, but frightful to contemplate as the *possible*, and in fact the *logical*, termination (so to speak) of near-sightedness.

The mechanical pressure exercised in the act of looking at near objects by the muscles used in fixing the globe has been mentioned. The distention which this pressure tends to produce is quickly recovered from if the eye is rested often; its effects are exaggerated by the excessive fineness of the objects looked at (as in embroidering, and small maps and type), by poor light, by fatigue, by sleepiness, by an overheated room, or cold feet; by tight clothing around the neck, by the effect of a recent hearty meal, or by protracted use of the eyes; and, in general, by anything which causes congestion of the eyes. The eyes are decidedly better able to bear fatigue in the forenoon than in the afternoon. The position of the body is important; stooping forwards should be prohibited, and the eyes not allowed to approach nearer than fifteen inches in general to the book or slate. The proper shape and proportion of a desk which

will facilitate the fulfilment of these requisitions will be described hereafter, as well as the proper arrangements for lighting a room.

The reader is referred to Dr. Harlan's work in this series for a fuller account of "How to Care for the Eyesight" than can be given here. A few remarks, however, are here quoted:

"It is well in reading to interrupt the strain of continuous gaze upon the page, and rest the eyes, by looking into the distance occasionally, even if only for a few seconds. In studying, or in reading anything that requires thought, this is likely to be done unconsciously; the natural condition in close thought is rest of everything except the brain.

"As distant vision represents rest for the eyes, and near vision represents exertion, care should be taken, in reading, not unnecessarily to increase this exertion by holding the book too close. The book should not be held nearer to the eyes than is necessary to make the print appear perfectly sharp and distinct, and no print should be read continuously that cannot be seen clearly at about eighteen inches.

"Without any optical or other discoverable reason, or, perhaps, merely in consequence of a careless and lounging way of sitting, young people often acquire the vicious habit of reading with the book held close to the eyes — a habit which, if examination of the eyes proves it to be nothing more, should be strictly

discouraged. It is very important, however, to determine positively that there is no physical cause for the habit, and to remember that true short-sight depends upon the form of the eyeball, which no amount of discipline can alter. Great injustice is often done to children by accusing them of obstinacy or inattention, when they are the subjects of physical defects of sight or hearing. Those with a high degree of *long-sight* are particularly liable to be misunderstood; for, though they can see distant objects better than near ones, they sometimes hold the book close to the eyes to make the print appear larger, and thus partially compensate for their dimness of sight. Children with astigmatism often appear stupid or inattentive, because there is in this defect what the subjects of it sometimes aptly call 'slow sight;' that is, they do not recognize a word quickly on first sight, but 'it seems to come to them afterwards.' Astigmatism is that condition in which all lines running in a given direction look blurred — as all the upright or all the horizontal, etc.

"In reading while lying down, it is hardly possible to hold the book in a favorable position, and the external muscles of the eye are strained. In addition to this, when the head is on a level with the body, instead of erect, there is a tendency to an excess of blood in the eyes.

"It is not well to persist in reading when overcome

with sleep, as there is a constant tendency for the muscles of accommodation to relax, and of the eyes to diverge, and they have to be forced back to their work by an effort of the will. The effect of this is soon shown in a congestion of the blood-vessels of the conjunctiva [white of the eye]."

This is the place to speak of the excessively bad and trying character of the letters on many maps used in schools. Some most excellent works, as regards thoroughness and execution, are absolutely intolerable on account of the fineness of the engraving. Other maps, printed from old and worn plates, are sold, which it would require the microscope of an expert to decipher. Maps for children ought to contain *few data;* geography should be largely taught by wall-maps and outline maps; and long search for places, too often hidden like "the needle in the haystack," should be discouraged.

Greek letters are not harder to read than a clear manuscript, if they are well printed. There is an old Greek type which is very trying, however. Lexicons are an indispensable part of a classical education, and the utmost care should be given to clearness of type.

The most agreeable tint for paper is either a cream color, like that of this page, or a pale blue (which is commonly taken for clear white), produced by adding a pigment. The practice of calendering the sheets,

to give a gloss, is altogether improper, for it causes them to throw a dazzling reflection in many lights.

It should be remembered that drawing, when the eyes have frequently to look from the page to a distant object, may be quite fatiguing. Drawing maps on a small scale must be forbidden; no names, for instance, should be inserted in a smaller handwriting than that which is usual. A large handwriting for ordinary purposes should be taught. Fine embroidery and lace-work are notoriously destructive to the eyes. As an illustration of the effect of too close work with the eyes, I will mention a recent minute edition of Dante's Divine Comedy, which occupies a volume measuring 2 by $1\frac{4}{10}$ inches. The type is so minute that it had to be destroyed after use, owing to the impossibility of distributing it; and several workmen had to stop working on it on account of the injury it caused.

Pale ink and greasy slates are trying to the eyes. Some other points will be mentioned hereafter.

The connection of near-sight with school-life and work has received a great deal of attention within the past twenty years. Statistics were first published by Cohn, of Breslau, who examined the eyes of 10,060 school-children, and found that of this number 1004 were near-sighted. Since then many examinations of smaller numbers of children have been made in Germany, Russia, Switzerland, and America,

with strikingly similar results. It seems to be a uniform fact, that the youngest classes have the fewest near-sighted children and the oldest the most. In Königsberg, the difference was found to be as nearly six to one. In New York, the difference was nearly as eight to one.* It may be a matter for congratu-

* Statistics by Drs. E. G. Loring and R. H. Derby, the ages ranging from 6 to 21 years. Percentages in the lowest classes, 3.50; in the highest, 26.78, near-sighted per hundred.

Other American observations give the following results:

Cincinnati, 630 students: District schools, 10; Intermediate, 14; Normal and High, 16, near-sighted persons in 100.

Brooklyn Polytechnic, 300 students: Academic Department, 10 per cent.; Collegiate Department, 28 per cent.

New York College, 549 students: Introductory class, 29; Freshman, 40; Sophomore, 35; Junior, 53; Senior, 37 per cent.

Buffalo public schools, 1003 pupils: the percentage of near-sightedness increased from 5 at seven years of age to 26 at eighteen years. It was further ascertained that one of every four graduates of the Buffalo High-School was near-sighted.

Dayton (Ohio) public schools, 765 pupils: near-sighted, 18.96 per cent.

In Amherst College, as has been shown by the very careful examination recently made by Dr. Hasket Derby, the percentage of *normal* eyes, on entering, is 50.8; on graduating, 36. The percentage of far-sight on entering is 5; on graduating, 13.2; that of near-sight on entering, 44.2; on graduating, 50.8. Amherst students have the reputation of working well at their books, and they are certainly not a puny or unwholesome set. They are rather largely country boys. This refers to the class graduating in 1879.

The statement for the class of 1880 (which I owe to the kind-

lation that we have in America fewer actual cases of near-sight,—perhaps one-half as many as in Germany; but it would seem that the *tendency of near-sight to increase rapidly as school-life advances* is quite as marked here as there.

It is really a serious question whether the attainment of high culture is necessarily attended by myopia in a large percentage of persons. The German nation is a spectacled nation: it has not lost its military qualities nor its intellectual preponderance in certain directions; but who likes to think of a *universal* use of glasses for ordinary vision by children and adults alike? And yet, if it were possible to send the whole nation to school up to the age of eighteen (in their way), this result would seem likely to follow. Perhaps among the drilled and orderly masses of Germany, where the boys (little old men) never throw stones or steal apples, the disadvantage

---

ness of Dr. Derby, as it is not published) is to the effect that near-sight developed from previous normal sight in 7 per cent. of the whole class increased in amount in 3½ per cent., and remained unchanged in 22.8 per cent. This is favorable, as compared with other statistics. Perhaps the mere fact of attention being paid to the subject has increased the care of the students; doubtless the gymnastic exercises have had a good effect.

These statistics, except the first and last, are quoted from the report of Dr. Conklin, of Dayton, upon the "Effect of School-Life upon the Eyesight," printed by the School Board, 1880. They are not very extensive, but they should dispel the idea that near-sightedness will take care of itself in America.

of partial blindness is not so great as it would be here; yet who wants a near-sighted policeman, or sailor, or stage-driver, or a spectacled actor or singer? The effect of near-sight upon the character has not been studied. We would add, for the thoughtful consideration of parents, these words from Mr. Carter's book:

"It will be manifest, on reflection, that the matters which are lost by the short-sighted, as by the partially deaf, make up a very large proportion of the pleasures of existence. I am accustomed, on this ground, strongly to urge upon parents the necessity of correcting myopia in their children; and I am sure that a visual horizon limited to ten or even twenty inches, with no distinct perception of objects at a greater distance, has a marked tendency to produce habits of introspection and reverie, and of inattention to outward things, which may lay the foundation of grave defects of character."

Homer was, assuredly, the possessor of a good pair of eyes — at least, in his youth!

If near-sight is at all connected with compulsory and protracted education,— that is, with the methods by which modern civilization is supported,— it becomes a national question of a grave character, whether the connection is a necessary one, or whether means for preventing its growth are not feasible. These means do exist, and it is our duty to urge their adoption.

Children are incapable, for physical reasons, of enduring long protracted effort. This is true not only of the mind, but of the eye, and for very tangible reasons. Their tissues are soft, — bones, tendons, muscles, and skin alike,—and yield readily to pressure. Now, no fact is better known than that near-sightedness is increased by the yielding of the fibrous coats of the eye under the pressure of the act of reading; and it is equally well known that childhood is, *par excellence*, the period when near-sightedness commences. Nature forbids the young child's *brain* to be used for a single task more than fifteen minutes or so; and to this fact, now understood by most teachers, should be added that the child's *eye* will not bear anything like the continuous strain that an adult's will bear.

Children differ greatly in this respect, no doubt; but the State should not exact tasks which are likely to injure even a small proportion of the whole.

A school for young children should present a very different aspect from that offered by an academy. The eyes should frequently wander. If academic tasks are given, the evidence of momentary fatigue and inattention should not be interdicted. If the school is held in the afternoon, in summer, what can prevent an occasional nap? (It may be remarked, by the way, that no one should read while sleepy, or just after waking.) A rational regimen for children

should include vigorous play, or mechanical or agricultural instruction, for a considerable part of the day, with very limited hours of study. The latter must be interrupted, for the youngest children every quarter of an hour, by a change of position, standing, walking about, and by change of study; for older children the intervals may be less frequent; but until maturity is nearly reached (say until the age of sixteen), it is best to have a complete break at the end of every hour for a few minutes at least, with enforced cessation of eye-work.

If it be proved, as it has been over and over again in England, Germany, and America, that children under twelve learn as much in three hours a day as in five, there would seem to be no excuse whatever for the cruel custom of confining them for the present period, with the consequent (we may fairly say the *consequent*) inevitable injury to the eyesight of many. Parents are not to be blamed for desiring that their children shall gain knowledge rapidly; but it is to be feared that it will be long before they practically assent to the truth of the proposition, that young children become tired after three hours of study, and that

Three hours of good work are better than five hours of poor work.

Children not infrequently have far-sighted eyes, which are not fitted for continuous work upon near objects, and which, of course, cannot be made fit by

any effort of the will. This defect is very liable to be neglected. It often causes headaches, which may easily be attributed to a difficulty of the brain. Convergent squinting is very liable to be the result of neglected far-sight in children. The remedy for far-sight is very simple indeed, consisting in the use of convex glasses. It is utterly useless to spend time on other methods; either the child must give up study, and all work requiring the inspection of near objects, or he must wear glasses constantly for such work.

When near-sight is considerable, glasses should be worn "as a part of the eye." If it is very considerable, two pairs must be used—one for far objects, the other, much weaker, for use in writing and reading. It is certain that any degree of near-sight which compels the child to stoop to work at ordinary well-made desks is productive of congestion and strain in continued study, which is highly prejudicial to sight; this injury may be avoided easily, comfortably, and safely by the use of weak glasses.

It is proper to warn teachers of the contagious nature of certain cases of conjunctivitis (inflammation of the outer covering of the eyeball, ophthalmia), and of inflammation of the edge of the lids. A physician is the proper judge of such cases.

All spectacles or eye-glasses should be selected by an oculist, *i. e.*, a physician trained to the special care of the eyes, and never by a mere optician.

CHAPTER VIII.

SCHOOL-DESKS AND SEATS.

AMONG the prominent causes of deformity of the spine and of near-sight among scholars, is the disproportion or otherwise bad construction of these necessary pieces of furniture.

"To bad positions in writing, drawing, at the piano, etc., also while standing during recitations (upon one foot); to carrying weights, heavy books, for example, more on one arm than the other; to too much exercise of one arm, while the other is comparatively idle, can undoubtedly be traced the majority of these curvatures (*i. e.*, rotato-lateral curvature of the spine). But it is not malposition alone that causes the trouble. It is likewise due to long continuance in one position, which at first may be a good one, but which, if continued for a considerable length of time, becomes changed, from simple fatigue of a certain set of muscles, into a bad one. These relax; sometimes one muscle or set of muscles gives way; sometimes another set. The burden of support is consequently thrown, to a great extent, upon the

ligaments which bind the vertebræ together. These, in a young person, are soft; their elasticity is soon overcome, and they are stretched. The chain of bones of which the spine is composed yields. The muscles and ligaments no longer do their work, and the superincumbent weight of the head and shoulders bends the chain, or perhaps the preponderance of other muscles, not so easily fatigued, disturbs the equilibrium, and a curve is the result. This curve may commence in the dorsal region, between the shoulders, or it may begin in the loins." *

Such a curve is easily straightened at first, but becomes a "fixed fact" after a while, owing to a permanent change in shape assumed by the vertebræ under the influence of continued pressure.

The faults in school-desks and seats which tend to produce deformity and defects of sight are the following:

1. Desk too low, causing a forward stoop, with tendency to congestion of the head and formation or increase of near-sight.

2. Desk too high, causing undue elevation of one shoulder, usually the right, with tendency to spinal curvature.

* Buckminster Brown, M. D.: "Influence of the Prevailing Methods of Education on the Production of Deformity in Young Persons," etc. Lecture delivered before the American Social Science Association, Department of Health, 1879.

3. Desk too far from the seat, with stoop of the body, injuring the eyes. Both here and in No. 1 there is danger of injuring the health by compression of the abdomen and chest; dyspepsia, small chests, round shoulders.

4. Flat desk-lid, interfering with freedom in writing, disadvantageous as respects receiving the light, and compelling the child to hold up his book in order to see.

As to seats, we have:

5. Seat too high, so that the feet are not supported, and the legs grow weary.

6. Insufficient support for the back, causing fatigue and improper attitudes, and consequent tendency for the spine to yield and take a side-curve.

7. Seat not hollowed suitably, causing pain and restlessness.

8. Well-proportioned desk and seat, not adapted to the age of the child using them.

In general, discomfort is an indirect cause of deformity, as it invariably leads a child to take improper positions.

Let us now consider the construction of good seats in detail, making allowance for differences of opinion among authorities. A medical friend of the writer's, who has long and carefully studied the question, and has children of his own in school, concludes that desks ought to be abolished, and arm-chairs substi-

tuted. This opinion is only an individual one, however, and we shall assume the necessity of desks.

The desks used for American public schools are usually fairly good, though there are glaring exceptions. The newer models usually give a separate seat for each child, which is desirable in the interests of discipline and cleanliness; and as regards shape and proportion many are praiseworthy. The chairs are commonly made comfortable by a slight backward tilt of the back-piece, and a corresponding upward tilt of the front of the seat-piece. The scholar can thus find perfect support in reading when desired.

Liebreich considers that "the back ought to be straight, and consist of a piece of wood only three inches broad;" "not high, and not slanting backwards;" "the top to be one inch lower than the edge of the table for boys, and one inch higher than the edge of the table for girls."

The national characteristics are shown in this difference. The American seat is thoroughly easy to lean back in; the German seat is suited to keep the child in an erect, semi-military attitude, with right angles at the knees and hips; and, in point of fact, it does keep him so, by the help of discipline.

What are the requirements of a good seat and desk?

First, it may be said, it is necessary that they should not tend to produce deformity of the spine.

It should be remembered, however, that a child is not, or ought not to be, kept sitting very long at a time — fifty minutes at the most. He does not require a chair to lean against continuously, but for occasional support by way of change. To quote an expression of Professor Henry J. Bigelow's (Harvard), "Rest against a well-made chair-back at will,— change of posture and variety of movement at will,— seem to me the best prophylactic against curvature." Whether a perpendicular back or a tilted back is used is not essential; either kind, if rightly made, is comfortable.

Second, an upright position in writing is indispensable; yet it is extremely rarely seen. The seat must at least not interfere with such a position. The desk-lid must not project so far as to touch the stomach; but that fault is hardly likely to occur.

The German plan of an upright back probably assists in forming the habit of sitting erect, and is on this account desirable. It seems to me perfectly suitable for all children who have not a commencing curvature of the spine. If the latter condition exists, or if there is a tendency to it, a slightly inclined seat is better, as giving more perfect rest or relaxation. Not that such relaxation should be maintained throughout the time of study, but it should be permitted at the scholar's will.

The child who is sitting erect, with the knees at

right angles, the back against an upright support, and the wrists on the table, is well balanced. The position is comfortable, not because of the amount of support given, but because the support is well placed. It is suited to a well and vigorous person, although it does not give so much rest to the over-fatigued body as a tilted seat does.

If the light is bad, children cannot be prevented from stooping.

Near-sighted children should be placed in the best light, and, if the defect is marked, should have weak glasses to read or write with.

If the desk and seat are suitably proportioned, the former will be only from six to ten and a quarter inches higher than the latter; and the book will be from fifteen to eighteen inches distant from the eyes of a scholar sitting upright. Near-sight is not uncommon to an extent which makes it uncomfortable or impossible to read at those distances. It is thought by modern ophthalmologists, in such cases, much safer to give a pair of weak glasses than to permit a child to get the habit of stooping forward, which, of itself, tends to increase near-sight.

The most luxurious position in writing is one in which the back is well supported, with a lean backward, and the desk-lid comes pretty well forward, in fact, within three or four inches of the stomach. Desks have been constructed with this object; but

scholars will not write leaning back. The posture may be enjoyed for a time, but it interferes with other work; it is interrupted by reaching to dip the pen, to get books, etc., and the support at the back is soon abandoned for the more congenial one afforded by the elbows resting upon the desk.

It is an excellent thing if the lid of the desk can be made in two pieces, hinged together, so that the piece next the scholar can be raised to an angle of 40° or 45°, and form a book-rest.

It seems to me difficult to maintain an absolute statement regarding the proper shape of seats. The reader sees that there are good arguments both for the tilted and the straight seat. There is good authority for saying that the back should be fully supported in a slightly tilted posture in writing; but, in view of the necessity in after life of writing in the erect position, it would seem that the child should at least be taught to do it so.

The child may take *any* position he likes, provided he does not keep it long. The more he varies his posture from moment to moment the safer he is. But he does not usually vary it much in writing; he gets one or two favorite bad positions, and only varies them in degree. It is excessively hard to change such habits when once formed. The primary school is the place to *form* the child in this respect. It is, however, unnatural for a young child to sit long in one posture.

A primary class must be allowed to write a few minutes only at a time; by frequent breaks a good deal of writing may be finally performed.

With these precautions, classes of young children may be drilled in the art of sitting up in a correct form. In writing, it is safest to sit squarely facing the desk (for sidelong attitudes engender the corkscrew, spiral curve of the spine). The upper part of the trunk must be straight, the head bowed as little as possible; "the shoulder-blades, both of the same height, are, together with the upper arm, freely suspended on the ribs, and in no way supporting the body; both elbows on a level with each other, and almost perpendicular under the shoulder-joint, without any support; only the hands and part of the fore-arm resting on the table." [Liebreich.] If leaning against the back of a chair in writing, some support is naturally given to the elbow from behind.

A child who is expected to write more than half an hour must have a full support for the back, at least as high as the shoulders.

The same is true of piano-practising. There must be a back-rest and a foot-rest also; the latter is easily supplied by a hassock or foot-stool.

The point where support for the back is most needed, for work of moderate duration, is the sacrum, or bone on which the spinal column rests. This bone is curved, and the support given by the curve at the

back of a saddle is exactly what should be found in a good seat. For weakly children, a support for the whole back is also necessary.

For protracted work, also, unusual support may be said to be necessary. But there should be no protracted work without breaks.

The seat must be large enough to support the thighs for nearly their whole length.

A "carved" seat, *i. e.*, with a saucer-like hollow of elongated shape to sit in, saves much of the pain which comes from sitting on flat boards.

Settees are decidedly uncomfortable and unsuitable. They do not encourage sitting erect, for the backs are much tilted; they do not support the bottom of the body properly, and the whole weight tends to slide forward; they are not suitably carved, and press directly on the tuberosities, or bones that are sat upon.

A foot-rest should be provided for several reasons.

The term "distance" is technically used by the Germans to express the distance between the edge of the chair and the perpendicular line dropped from the edge of the desk. Authorities differ, even in Germany, as to what the distance should be; but the most approved opinion seems to be that it should equal zero (the plumb-line grazing the seat), or a minus quantity (the line falling on the seat). Liebreich directs that it shall be zero for writing, and five inches for reading, which is unobjectionable, as his

desk has a hinged lid which turns up, and assumes an angle of 40° for reading. He remarks that

"If the child has to read a book placed on the table at too great a distance, it sits on the edge of the seat, a very unhealthy and fatiguing position. It rests the body on the two arms, and, if the difference between the [height of the] desk and seat is too great, the chest is supported by the projecting shoulders, instead of the shoulders resting on the thorax. Soon this position becomes too fatiguing; the head, bent forward, becomes too heavy, and must be supported by one or both hands at the temples, or by the chin resting upon both arms. Thus every possible modification of the two positions immortalized by Raphael, in the two angels at the feet of the Sixtine Madonna, is adopted by the children; but while the angels look into the far ether, our children stare into a book, which, in one of these positions, is only two or three inches from the eye; and, in the other, sideways from the head, and therefore at an unequal distance from the two eyes.

"It is still worse when writing; with desks and seats of the ordinary form, only one arm rests on the table — this is generally the right, while the left hangs so that the elbow approaches the left knee, and only the tips of the fingers hold the book on the table. The edge of the book is no longer parallel with the rim of the table, but slanting, or even per-

pendicular to it. If we observe the position which the upper part of the body assumes, we find that the lumbar vertebræ bend forward, those of the chest towards the left, and those of the neck forward, with an inclination to the right; at the same time, the lower part of the shoulder-blade stands too far off from the ribs, and is elevated too much towards the right, and the shoulder-joint is raised and pushed forward. To be in such a position for several hours of the day, at a time when the youthful body is rapidly developing, must naturally produce bad results." The author then speaks of spinal curvature as thus caused, and adds that "the period of the development of spinal curvature and short-sightedness coincides exactly; and they seem to form a circulus vitiosus, in so far as short-sightedness produces curvature, and curvature favors short-sightedness; while evidently the same bad arrangements are at the foundation of both these anomalies."

The edge of the desk should be of such a height that, as the child sits upright and lets the arms fall freely, the elbows are about an inch lower than the edge. For girls, the desk may be one-half or three-quarters of an inch higher than this.

It is a very common fault to furnish school-rooms with desks of only one size. The diversity of height among children, differing even only by two or three years, is such that three sizes ought to be kept in

each class of a "graded school;" and in a school of mixed ages, a larger number. To satisfy all requirements, eight sizes are needed, as indicated in the accompanying table, which is quoted from Var-

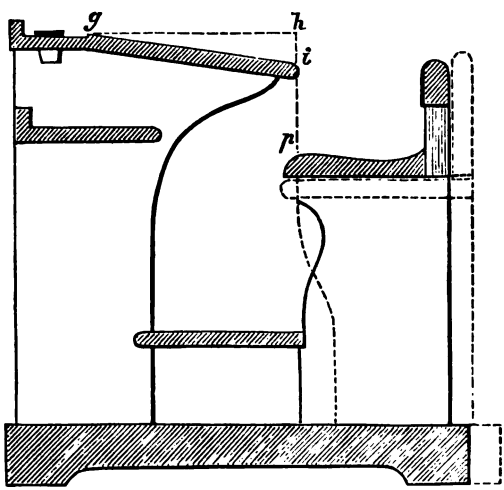

Varrentrapp's school-desk and seat, as used by the youngest classes.

This is adapted to all ages by changing the seat only. The dotted lines of the seat give the position and dimensions which are suitable for the older scholars, who can dispense with the foot-rest. The distances *g i* (36.4 centimeters) and *h i* (5.2 centimeters) remain the same for all children; the "difference," *i p*, is slightly increased for the older ones.

DIMENSIONS (IN CENTIMETERS) OF SCHOOL-DESKS AND SEATS SUITABLE FOR SCHOLARS OF DIFFERENT SIZES.

	Height of the Scholar.	Height of front edge of desk above the floor.	Height of back edge of desk above the floor.	Height of seat from floor (or foot-rest).	"Difference" between seat and desk.	"Distance."	Height of upper edge of back of seat from seat.	Distance of back of seat from back edge of desk.	Breadth of back of seat.	Depth of shelf for books.	Perpendicular distance of shelf below the desk-lid.	Depth of seat.
I.	98 — 109	51.5	45.5	30.	15.5	— — 5	15.5	17.5	8	20	10	22.5
II.	109 — 120	56.	50.	33.	17.	— — 5	17.	19.	8	20	10	24.
III.	120 — 131	60.	54.	36.5	18.5	— — 5	18.5	20.5	8	20	10	25.5
IV.	131 — 142	66.	60.	40.	20.	— — 5	20.	22.	8	22	10	27.
V.	142 — 153	71.5	65.5	44.	21.5	— — 5	21.5	23.5	8	22	12	28.5
VI.	153 — 164	76.5	70.5	47.5	23.	— — 5	23.	25.	8	22	12	30.
VII.	164 — 175	81.5	75.5	51.	24.5	— — 5	24.5	26.5	8	24	12	31.5
VIII.	Over 175	86.	80.	54.	26.	— 5	26.	28.	8	24	12	33.
The Same Table in Inches.												
I.	38.58 — 42.91	20.28	17.86	11.8	6.06	— 1.97	6.06	6.85	3.15	7.9	3.9	8.88
II.	42.91 — 47.27	22.06	19.7	12.98	6.66	"	6.66	7.45	"	7.9	3.9	9.47
III.	47.27 — 51.56	23.6	21.27	14.35	7.24	"	7.24	8.03	"	7.9	3.9	10.06
IV.	51.56 — 55.86	25.96	23.6	15.7	7.9	"	7.9	8.69	"	8.69	3.9	10.56
V.	55.86 — 60.26	28.17	25.76	17.27	8.48	"	8.48	9.27	"	8.69	4.69	11.14
VI.	60.26 — 64.24	30.15	27.79	18.65	9.08	"	9.08	9.87	"	8.69	4.69	11.80
VII.	64.24 — 68.94	32.12	29.76	20.09	9.66	"	9.66	10.45	"	9.47	4.69	12.38
VIII.	Over 68.94	33.86	31.5	21.27	10.26	"	10.26	11.05	"	9.47	4.69	12.98

rentrapp. The table is especially valuable as giving the correct heights for the chair and the desk-lid, which are the chief factors (see columns 3, 4, 5). The edge of the lid overhangs the seat by about two inches. If the height of the chair is reckoned from the foot-rest, the latter is supposed to be directly under the knees. The chair-seat is, in fact, much higher than is common in our schools, which encourages the habit of keeping the knees at right angles.

A rest may properly be placed under the desk. The figure represents a desk which raises the scholar a good deal (without interfering with comfort), the object of which seems to be to facilitate the master's inspection of the writing.

To complete this account, it is necessary to describe the mode recommended by Liebreich.*

1. One and the same size and model of desk should be used for children and grown-up persons of both sexes.

2. The adaptation to the height of each child should be effected by varying the height of the seat and the foot-board.

3. The edge of the table is always to be perpendicular to that of the seat.

* "School Life in its Influence on Sight;" a lecture delivered before the college of preceptors at the House of the Society of Arts, July 13, 1872. London, 1872.

4. No seat is to be without a back, and the top of this is always to be one inch lower than the edge of the table for boys, and one inch higher than the edge of the table for girls.

5. In all classes where the boys change places, the height of the seat is to be regulated in proportion to the average height of the pupils.

6. In all girls' schools, in all those boys' schools where the children do not change places, in boarding-schools, and in private school-rooms, the seat of each child should be accurately regulated in proportion to its height. This is effected by a chair, the seat of which can be raised and lowered by means of a screw, while at the same time the back is brought forward in proportion.

The present writer would say that it seems to him very desirable to select seats that suit individuals, and allow them to retain such seats, instead of shifting at the monthly or weekly change of rank. There is also, in some cases, much advantage in placing the near-sighted, the partially deaf, or the unruly near the front.

CHAPTER IX.

A MODEL SCHOOL-ROOM.

UNDER this heading, I wish to state a number of points which have various bearings on the health of scholars and teachers in an ordinary class-room.

Shape.— For reasons which will appear, a parallelogram is desirable, with the teacher's platform and desk at one end. This form is better for acoustic reasons than a square; and it gives the teacher better command over the pupils than if the desk is in the middle of one long side.

Length. — The limit of distance at which large, clear writing on the blackboard is easily seen (with letters $2\frac{2}{5}$ inches in height) is about thirty feet. There should be a space between the rear row of desks and the wall, which may add two or three feet. The length of the room should, however, in no case exceed forty feet (Erismann), and is limited by Varrentrapp, Zwez, and others, to nine or ten meters (30 to 33 feet).

Width.— This is restricted by the fact that all the windows are supposed to be placed on one of the

long sides of the room; and that these windows will not light up a room effectively if its depth exceeds a certain ratio to the height of the window. This ratio is commonly set as 3 to 2; so that if a window-head is fourteen feet above the floor (which is rarely the case), the light will penetrate effectively to a distance of twenty-one feet. Again, allow three feet for the width of the passage beyond the farthest desk, and twenty-four feet is seen to be the extreme allowable width; or, if the window is 13½ feet high, about twenty-three feet.

Height.— This is limited to thirteen or fourteen feet, by practical considerations, such as the expense of building and heating.

Windows.— The direction from which light comes to the desk of a scholar is of great importance. It is universally agreed that for general purposes that which comes from the left is best. Almost all authorities of scientific weight order that this be made the rule, and, in fact, the Germans generally forbid the use of windows upon any other side of the room. It may be said that light from the right hand is as useful to read by as that from the left. This is true; but in writing, such a light is very annoying. And a combination of lights from the right and left throws a double set of shadows, which is also trying to the eyes. The same may be said of a combination of light from the left and rear.

The worst light, in general, is that from directly

in front of the scholar. It pains the eye, if intense. If moderate in amount, it still inflicts an unconscious strain on the retina, by throwing on it an illumination which would be healthful if the eye were not at work on small objects, but which is a needless tax on the endurance of the laboring organ. Practically, any one may prove that it is much harder to read with the book held towards a window than with the book held away. This difficulty is felt by the scholar, who tries to remedy it in his own way.

Sometimes he holds the book closer to his eyes, which aids in developing near-sightedness. Sometimes he twists his body around so as to receive the light on his book in the natural way, and this, if allowed, may contribute to "one-sidedness" or crookedness of figure.

Windows in the rear, fronting the teacher, are very annoying to the teacher, and considerably lessen the power of watching the scholars; while for the scholars they are exceedingly bad, as they throw the shadow of the person on the desk or book.

The most agreeable light to write by is one which comes from a pretty high point, and strikes the page at a wide angle. An ordinary window will not give such a light, but may still be found very suitable if placed on the left of the scholars.

Light entering horizontally has hardly any value for a student who has to use a flat desk. The ex-

periment may easily be made by any one. Hence, the lower panes of windows are of little use as admitting light for study. The upper parts are by far the most important, because they throw light to the opposite side of the room, and also light up the ceiling, which in reality is a principal source of light. By the use of iron beams, the window-heads may be brought within a few inches of the ceiling.

The reader will easily see the objections to a semicircular arrangement of the seats in a room (as is often the case in primary schools). It is not an advantage to the teacher to have to turn her head to the right and the left, as must be done if her chair is near the imaginary centre. Nor can such a group of seats be fairly lighted without throwing light directly in the faces of some of the scholars, not to speak of the teacher.

The size of the windows, taken collectively, should equal at least one-sixth of the floor-space, and ought generally to be more. In the best American schools, it is very much more.

Shades. — The best protection against a hot sun is furnished by Italian canvas screens. Common cloth shades, with rollers, are good; they had better be rolled at the bottom. Shades with slats are better.

White daylight, the unaltered light of white clouds, or the clear sky is better than colored light to work by; hence, there is no advantage in tinting the ceiling, or in giving it any other than a clear-white color. But the walls at which the inmates of the room must

be frequently looking, and which cast side-lights into the eyes at most times, may be tinted of a bluish, or semi-violet, or neutral hue.

The *blackboards* should be so placed as to receive a good light. If put between windows, this is not the case, and the eye is fatigued by the bright light at the side.

Polished, brilliant, dazzling surfaces, or light-colored surfaces on which the sun is shining, should never catch the eye while at work. The floor should be dark and without polish. The sun's rays should never fall on the scholar's work.

Artificial light has to be used in some cases. It should be given by powerful burners at a considerable distance from the pupils. Ground-glass is bad for shades. Ground or ribbed glass is bad for windows.

Gas-light is a very good illuminator when the gas is good. But there is a great deal of an injurious substance given off in burning, chiefly consisting of sulphurous acid, which ought always to be got rid of by a special ventilating-cap and flue applied to the gas-flame, so arranged as to lead the spoiled air straight to the house-chimney before it can mingle with the air of the room. The tube may be so managed as to have a powerful ventilating action on the atmosphere of the room, also.

Decoration. — The sun is the best decorator, and should be let in when this is consistent with other points. Flowers, plants, colored prints, light and

pretty wood for desks, give an impression of great cheerfulness, which it is very desirable to maintain in the interests of health. The lower part of the wall may be wainscoted, to preserve it and facilitate cleaning. Wall-paper should not be used; the walls should be finished with a material that can be cleaned or else whitewashed.

Architectural ornament is the last thing to be thought of in a school-house, which should be built, first and foremost, to do its work well — as we build a locomotive-engine. "Architecture," *i. e.*, considerations of external appearance, may be considered a foe to the health of school-children when it is allowed to absorb school-funds to the neglect of essential internal parts. The use of flanking projections, buttresses, pointed arches, or other features which cut off portions of light, is to be condemned entirely; the exterior appearance of a school-house must necessarily be rather plain in certain respects.

Closets. — The children's outer clothing and umbrellas should not be kept in the class-room, to pollute the air with their steaming exhalations. A closet must be provided with space enough for each child's clothing to hang free of the next one's; and the closet should be warmed, lighted, and ventilated. Its position will naturally be near the class-room in ordinary cases.

The *floor* should be of hard, close-grained wood, of a kind which will not easily splinter.

CHAPTER X.

VENTILATION AND HEATING.

IT is impossible to do justice to either of these subjects separately. The air breathed must be warmed for a large part of the year. The warmed air must be got rid of by ventilating apparatus, which, again, is often in close relation with that for heating. The annual bills for heating and for ventilation depend equally on the price of coal. In practice it is found that, unless planned to work together, the "system" of ventilation often contradicts the "system" of heating, and *vice versâ*. Need we speak of careless masons, carpenters, and tinsmiths, who render the best plans of the sanitary engineer void and of none effect?

In a word: All heating apparatus, with trifling exceptions, ought to be apparatus for supplying fresh air. It is impossible to consider the problem of *introducing* air without considering that of *discharging* it. It is absurd to hire one man to get the air into a room, and another to get it out. And yet this is practically done in assigning contracts.

It is not necessary that the same party should do all the work, but that the different parties should be controlled by one authority.

Quality of the Air.— It is well to have the inlet of the air-duct for a furnace protected from the more violent winds. It is very desirable to place it at a sufficient height (say ten or twelve feet) from the ground, in order to avoid low-lying strata of polluted air. The neighborhood of privies is certainly not a desirable one; yet even this circumstance may exist, as was recently the case in a school in one of the large northern cities, with most disagreeable results.

The furnace ought not to leak gas. As a rule, the draught is constantly inward towards the fire and smoke, so that, even if there are small cracks in the furnace or flue, there is no discharge of gas. It is unsafe to have a valve in the flue above the furnace. Some valves are expressly made so as to shut only half-way, or to leave half of the flue always open; but it is better to regulate the draught, if necessary, by dampers to the inlet of air under the fire-pot.

A large furnace is best,— one large enough never to need to be made red-hot. Slow combustion is economical; but, much more than that, it seems to supply an air which has not been "killed" or "burnt." A little very hot air is known by experience to be distressing, when a large supply of air heated only to about 90° is perfectly pleasant. The

discomfort is due to the want of fresh air; partly, also, it may be, to a chemical action of the red-hot iron on the air, or the transit of carbonic oxide.

The addition of a liberal amount of water by evaporation, in dry, cold weather, is a necessity. At least, some people are very unpleasantly affected by air that is not so treated. Nevertheless, there are hospital-wards (as in the City Hospital at Boston) heated by the simple introduction of abundant supplies of fresh air that is simply warmed, and not made moist; and the result seems eminently satisfactory.

"Indirect radiation" is a term used for those cases where air is heated at a central point and conveyed in pipes to the rooms. "Direct radiation" is the use of radiators in the rooms; it generally implies the absence of means for introducing fresh air, and as such is objectionable, unless for heating entries or very exposed points.

Apparatus for heating by steam or by hot water are generally to be praised. The great point to attend to is, that the air be not heated in excess.

Stoves have several objectionable points. In the first place, they overheat a part of the room, and leave other parts cold. This is obviated in a degree by a screen. But a still more important objection to most stoves is the want of a method for introducing fresh air. Almost any ordinary stove can be altered, however, at moderate expense, so as to give a large

supply of fresh warmed air. The "fire on the hearth" is an example of the way it is done. A cylindrical metal screen may be placed around the stove; it should reach to the floor, and rise as high as the stove. Under the floor a pipe is to be led from the space enclosed by this screen to the outer air; the pipe passes through the house-wall, and may have a valve at any convenient place. This converts the stove into what is commonly called (when placed in a cellar) a "portable furnace" with "hot-air box." The fresh air enters the room over the top of the screen. This plan removes the objections which attach to air-tight stoves.

Further use may be made of the stove-funnel by causing it to warm another tube which serves for ventilation only. Thus, the smoke-funnel may be enclosed in a larger pipe, which is not closed either above or below, but, starting at a proper point in the room, rises with the funnel through the roof, and discharges its own quantum of impure air sucked from the room.

If the chimney-place is bricked up, a hole may be knocked in the brick-work, or at a higher point in the chimney.

A fire in a fireplace in an ordinary city house may be supposed to exhaust enough air from a room to make it wholesome for ten persons. If several gas-jets are burning, this is no longer true; for a gas-jet of the ordinary kind spoils as much air as two or

three persons. Of course, an open fire is but a partial means of ventilation for a large school-room, besides being very wasteful of fuel.

The requirements for good ventilation in a school are, that the air shall be furnished in a fresh volume of from 40 to 100 cubic meters (1400 to 3500 cubic feet) hourly to each scholar. If the room is spacious, there may be 300 cubic feet of space per scholar, so that the whole air-contents of the room are required to be evacuated from five to twelve times an hour! while, if the room is of moderate size, say 200 cubic feet per head, the change must go on faster—the entire contents must be changed once every 8½ minutes! And this can be done, and is done, without causing a draught. But we can see at once, that if the room is crowded, and the air is wholly changed once in *four* minutes to correspond, the draught will be great. A closely-packed room is not well ventilated for just this reason; the inmates cannot bear the draught. A certain amount of "elbow-room" must be given, or the air-currents will not be borne. There should be, therefore, about fifteen square feet of floor-space for each inmate of the room, or from fifteen to twenty.

These considerations lead directly to a fact which, though it stares us in the face, is seldom fully comprehended; that fact is, the *expensiveness* of ventilation.

Every house requires a considerable amount of heat to keep its walls warm. Let the house and contained

air be raised to 70°, and let the supply of heat from the furnace be cut off, the whole amount will pass away through the walls in a day or two. This is a necessary waste; or at least it can only be diminished by furring and thickening the walls and by doubling the windows. But to extract every eight minutes a school-houseful of freshly heated air, and send it up over the ridge-pole, would seem extreme folly to any one unacquainted with the facts and the necessities of the case. This is not the place to explain these necessities; suffice it to say that the school-house is a peculiar place, a very closely packed place, and subject to those peculiar morbid influences which attend the close packing of human beings, and which are so distinctly proved to exist, that the death-rates of different cities are high or low in proportion to the number of people dwelling on the square acre. Fortunately, we have it in our power, by the judicious arrangement of flues and the liberal use of coal, to render these school-rooms as wholesome as the average dwelling-house. I do not say that this is generally accomplished, for it is not, even in enlightened cities.

In a large school, with a thousand or more pupils (though it is certainly undesirable to have even as many as a thousand), a system of flues leading to a heated chimney is often used to carry off bad air. If the draught in this chimney could be maintained by

a little steam-engine and fan, an economy in fuel could doubtless by made, and the experiment should be tried in some school where there are already steam-boilers.

The janitor, under proper oversight, may be made to feel the importance of his duties, and the impropriety of those customary negligences by which he saves himself trouble and lessens the amount of coal burned. If he be found incapable of taking a proper pride in his duty, he should be replaced by another.

One point is seldom conceded by this class of men. The cellar air is their native element, and they seldom realize that it is an impure element. They do not practically know that cellar air is generally unsuitable for the supply of the furnace air-box. If not prevented, they will at times close the outer orifice of the duct, and open a slide which admits the cellar air into the furnace box. It can rarely be safe to do this.

There are certain contrivances for letting fresh air enter a room unwarmed without striking the scholars. One of the best and simplest is to place a narrow piece of wood under the lower sash. The effect is to leave a narrow opening between the sashes, which admits air in an upward direction.

Another plan is to use a wider board, and pierce it with one or two wide pipes bent at right angles and provided with valves; this, also, throws the wind

upward. This is called the "Maine" ventilator. Sometimes it is modified by covering the inlet with tin, perforated with fine holes. The object of doing this is to prevent the inflow of a great volume of air in the form of a draught; but it really shuts out about three-quarters of the air. Then there is a contrivance for letting air enter through a sifter of cloth, in the upward direction; but the cloth can easily be perceived to lessen the ventilating effect most essentially. A better method for sifting the air (because simpler and cheaper) consists in simply tacking very thin flannel to a mosquito-frame, in the place of gauze, and inserting the frame as is usually done. If it is thought desirable, both sides of the frame may be thus covered. The plan is found effectual.

Dr. Keen, the editor of this series, "tacks or pins a piece of cloth or newspaper across the lower ten or twelve inches of the window-frame and to the window-sill; then raises the lower sash one inch to six inches, according to the weather. By this means, the draught is made to pass in the upward direction, both from between the two sashes and from the opening beneath the lower sash." *

These inlets for fresh air, however, will not always let air pass. On a "close day," when there is no wind, even wide-open windows will not sufficiently ventilate a room full of people. If windows are

* See "Winter and its Dangers," Health Primer in this series, by Dr. Osgood, in which these various plans are illustrated.

placed on two sides of a room, ventilation is much more likely to do good; if on opposite sides, all the better; but in school-rooms there is an objection to this plan, owing to the interference of the light. The true value of these window arrangements seems to me to depend on the existence of a chimney or other similar draught-compeller in the room. If air is sucked out by the flue, air will readily enter by even small openings in windows; but if not, a window opened a foot or two will often have but little effect.

Temperature.—It may be proper here to call attention to the disturbing effect which excessive heat has on the circulation in the brain, especially when the air at the floor is cold and the air at the level of the head is hot. A temperature of sixty-five is agreeable to healthy children, if they have an occasional chance to stir themselves, and if their clothes are dry. Seventy should not be exceeded; and it is desirable that no two parts of the room should differ more than two degrees (2° Fah.).

Wet clothing must not be allowed to remain on the scholar's person. This must be an imperative rule, enforced by the teacher's personal attention.

It is hardly necessary to mention colds in the throat, head, and lungs as favored by such neglect. It is, however, easily forgotten that catarrhal affections of the eye and ear, producing impaired sight and hearing, and menstrual irregularity, are also liable to be caused or aggravated by such neglect.

CHAPTER XI.

SITE, DRAINAGE, ETC.

SITE OF HOUSE.—This should be as healthy as possible. The character of the sub-soil should be known, in order that proper precautions may be taken against dampness, if clay, hard-pan, or rock forms an obstacle to natural drainage.

Some protection from the north winds is desirable; but the bottom of a valley, or low-lying ground, is generally objectionable.

The plan should be such that the sun may enter every room of the house in the winter as well as summer.

The lot ought to include play-grounds in the city; at the least, there should be space enough about the house to allow sufficient light to enter the windows. This requires a considerable outlay for land, which seems to be regarded as superfluous in some large cities. In the recent competition between plans for model schools, at New York, this point was forced upon the notice of the committee of award. In their report, they claim that a public school building in a

large and densely populated city should not occupy more than half the lot; and that, further, "at least two adjoining sides of the building should be freely exposed to light and air; for which purpose they should be not less than sixty feet distant from any opposite building."

The terms of competition in this case were, that the house should accommodate eight hundred children, and should be built on a lot one hundred feet square, facing north, enclosed by buildings of average city height on the other three sides. As a result of the competition, it appears to the committee that such a house cannot probably be built on such a lot consistently with the requirements of health. The children can be provided for, but the light will probably be defective in many rooms even with the best arrangement.

Height of House.—One of the points to be aimed at in the sanitary reform of schools is a reduction in the height of buildings. A strict system of drill may prove the surest precaution against accident in case of fire, and deserves to be kept up. But there are many children—particularly girls—who ought not to be required to ascend many stairs. In the course of a forenoon, several lessons may have to be recited in different parts of the house, with going up and down; and the recess or recesses are, or ought to be, taken in the school-yard. Decided injury from exer-

tion of this sort occurs in occasional cases; and it is a disadvantage to any girl to be placed so high that she is unwilling to take the trouble to go out of doors at recess.

Sewerage.—It is doubtful whether privy accommodations, or water-closets, for a large school, can safely be placed in the cellar. There will pretty surely be a nuisance of greater or less extent, which is much more serious than if it existed on an upper story, or in a yard, since the air of cellars must rise more or less into the house. If the plan be tried, let all precautions be taken: if water-closets are used, they should not be of the pan variety, but rather hopper-closets, or some form made entirely of earthenware, and should provide a rapid, abundant discharge of water; if urinals, they should contain no wood-work in any place which can be reached by spattering, and should be made of impervious stone or glass—not metal. A long trough of masonry, kept partly full of water, is a good substitute for water-closets. Some closets should be placed on the different stories, in any case. It is far the best if the whole can be put in a tower, semi-detached and accessible from every story of the main building.

A correspondent from a distant city writes as follows: "From considerable observation and inspection of the public schools, I am sure that the water-closets, on the boys' side at least, are as filthy as they

can be; so filthy, in fact, that no decent boy can or will use them." This state of things is familiar to me as a reminiscence of childhood; at present my observation, confined to the city of Boston, points to a very great improvement, seconded in many cases by the very anxious care of the masters. But in many cases there is a truly shocking state of things, descending in one case, reported by a correspondent, to the use of a common waterless privy in the second story of a school, while in country places there are numberless cases of shameful neglect. The old-fashioned plan, which allowed all the excrement to lie in a heap on the surface of the soil, is by no means the worst of all these. Where earth is plenty and waste land near by, there is no excuse for not "sanitating" the privy by throwing in a layer of fresh dry loam once in a week or two so as to cover up everything, and removing all the contents together, and burying them, every two or three weeks at longest. This plan, if faithfully pursued, will almost entirely destroy odor.

CHAPTER XII.

PRIVATE SCHOOLS.

A FEW points may be added of special application to boarding-schools and private day-schools.

Both classes of schools are very often held in common dwelling-houses, very slightly changed by adding an L, or something of the sort.

Dwelling-rooms and parlors are *very often* not provided with windows sufficient to light them well for school purposes. They are, unfortunately, often not provided with fireplaces—an unpardonable fault.

As regards light, much may be done to improve matters by using light colors for walls; by whitening the ceiling; by cutting down trees in front, and removing drapery-curtains within.

A room with ten or a dozen pupils may be made comfortable (as regards the freshness of the air) by an open fireplace. For a larger number there are needed special arrangements for ventilation, such as openings in the flues at ten feet from the floor and at the floor; or tin tubes, heated by one or two gas-jets, acting as flues.

It is, of course, desirable not to let *more* than two pupils sleep in one ordinary room. A great deal of crowding, however, of a very reprehensible sort, may be found in boarding-schools. Under ordinary circumstances, 1000 cubic feet of space should be allowed for one person to sleep in.

The purity of the air depends on many external circumstances. A house with many windows, on a corner lot, with free exposure to wind and sun, and not very solidly finished in the wood-work, is likely to have much more and better air than one in a narrow street, with the rear built around. Old houses are often musty; I will not say incurably so, but their atmosphere is commonly tolerated rather than that trouble should be taken.

Dormitories should be strictly supervised. A teacher should regulate, or oversee, the admission of air by windows at night. A good dormitory for boys may be made of a long room, with a row of small compartments on each side, each containing a bed and a window; the partitions, not permanent but screens, not exceeding six feet in height, and the doors consisting of curtains. Ventilation by open windows at the ends may be safely practised in the case of healthy young folks.

Supervision should be exercised, also, in the interests of morality. Licentious practices are certain to be introduced, unless this is done. A late distin-

guished hygienist assured me, that in a boarding-school which he attended, he was sure that all the boys but one or two were guilty of such practices; and he added that this was not an exceptional school. But a very great deal can be done, by masters who are themselves of pure lives, in checking such tendencies. Teachers, and especially parents, can do incalculable good by suitable explanations to pupils of say twelve years and upwards, who sin far oftener from ignorance than from vice.

Perhaps less needs to be said in regard to girls; but it is well known that vicious persons occasionally enter the best establishments, and that the love of imitation misleads even those whose behavior and general intentions are good.

It may be superfluous to say that girls at a boarding-school need that kind of care which mothers should give. It may be safe to let steady young women of sixteen or upwards go to large colleges for girls; but younger girls, in my opinion, ought not to be placed in large schools away from home. The tranquillity, the absence of exciting influences, or at least their absence during a greater part of the day, which prevail in a well-ordered house, are necessary at that age, if ever, in laying the foundations of a firm and steady nervous system. The constant presence of scores or hundreds of other girls, some critical, some vindictive, some too demonstratively

friendly, is a strain upon the nervous system of a child.

Children ought to have some hours in the day in which to do exactly what they like, inventing their own amusement, and laughing as loud as they will.

Boys should have a good gymnasium, and, in the country, place and means for out-door games. Girls should be obliged to have proper shoes (heels not over half an inch high), and should be let out (or led out, if necessary,) to walk twice a day; they ought to learn the habit of walking while at school.

Music is a fatiguing occupation; if the scholar is fond of it, it is not less an exertion, and should not be carried far (say not over an hour a day of practice) without a corresponding reduction of study. And no prolonged practice should be allowed without suitable breaks, in accordance with general principles which have been fully explained.

CHAPTER XIII.

COLLEGES.

IT may be questioned whether college students should be included in a work on "school" hygiene. They are, however, very largely under age and in the growing period. The average age at entrance in the best colleges is about nineteen. In the Amherst statistics it appears that during the four college years they grow in height 1.3 inches and in weight 11.1 pounds. The two lower classes, at least, are of the age which breaks down in military life. They are unformed, unconsolidated, and none know better than the authorities of colleges how ductile their minds are in certain directions not laid down in the curriculum of study.

The inference from these remarks is plain: the students must not be left to themselves in physical matters. The younger classes, at least, should be compelled to attend regular exercises in gymnastics under the charge of some respected person. The title and position of professor may confer that respect, or distinction as an athlete and an ingenious

inventor of apparatus may give it; but a mere prize-fighter or trapezist is not likely to do well. He should be chosen with the same care as a professor in Chinese.

The exercises required of a whole class must, necessarily, be such as fall far within the capacity of some. They should include a brisk run, free-hand exercises, and exercise with wooden dumb-bells or light clubs. The class is divided into sections, each under the lead of a student. There is no reason why a hundred or more should not exercise at once in this way, with the assistance of music. Thirty or forty minutes a day is sufficient for the purposes of health for most students. Those whose larger muscular development craves more work should be put into special classes or allowed to use all kinds of apparatus, but always under the general control of the teacher. There will be students who could be trusted with instructing classes, but most of them have a propensity to lame themselves, and get discouraged over the hardest apparatus the moment they first enter the gymnasium; and, in short, nine-tenths of them are no more fit to be trusted alone than little boys are with firearms.

The use of the gymnasium is a necessity for those who intend to do boating. The latter exercise, as performed in swift shells, has very little tendency to develop the chest. It brings a great and sudden strain on the heart and lungs, which is very likely to

be injurious in either of two cases: first, if the boy's frame is below a certain minimum of development; and, second, if, being of fair *natural* growth, he is not specially trained to chest-power—the capacity of the lungs and heart to receive a double amount of air and blood in a given time. The pulse of oarsmen after a race beats at twice the normal rate, and a long and careful training alone can make such a strain safe. If boating is to be encouraged,—and I believe it should be,—a gymnasium is a necessity.

It is a great benefit to the students to have good, substantial "commons" provided for them. This is done at Harvard in a very satisfactory manner and at exceedingly cheap rates. Many students injure their health by "boarding themselves" in their own rooms, and this class especially need such a public provision.

In regard to the structure of college dormitories, it would be well to place them running north and south, so that the sun shall enter every window. For further remarks on the site of buildings, see Chapter XI.

The public have been recently excited at the fatal epidemic in Princeton College. There is nothing at all new in such an event; and if instructive, it is so only in one point, namely, that filth generates disease in seminaries of learning as readily as in New York tenement-houses.

CHAPTER XIV.

CONTAGIOUS DISEASE.

IF a person residing in a school is attacked by small-pox, varioloid, scarlet-fever, measles, diphtheria, or any contagious disease of the eye or skin, such person should *at once* be removed or absolutely isolated. It should be left to the judgment of the physician to decide whether such isolation shall be considered sufficient to permit the other scholars to remain. Such may be thought the case if the school is in the country and has a separate building for an hospital. It may be thought safe for day-scholars to come (*e. g.*, to the rooms in the lowest story, while the patient is in the top of the house); but, in general, prudence will lead to a suspension.

After recovery, thorough disinfection of the room used by the patient is accomplished by burning two pounds of sulphur. Previous to doing this, all bedding is exposed as much as possible by spreading it on chairs, etc.; and the windows and doors are closed tightly. The wood-work in the room, of all sorts, is then to be sponged repeatedly with solutions of chlorinated soda or carbolic acid.

In the case of public schools, the following rules are suggested: *

"A certificate of vaccination to be required of every child entering the public schools.

"Physicians to be required, under penalties, to report to local boards of health all cases of dangerous infectious diseases observed by them; the board to inform principals of schools.

"The existence of any case of such diseases in a house to exclude the inmates from attendance at schools for a sufficient length of time, the propriety of re-admission being certified to by a competent physician.

"Disinfection of premises and clothing by the board of health in every house where the above diseases have prevailed.

"Medical authority to be designated, for the purpose of advising teachers and pupils, and pointing out to the school committee matters in regard to which their authority might be used to improve the sanitary condition of schools."

---

* See "Massachusetts State Board of Health Report," 1878, page 252.

PART II.

INDUSTRIAL HYGIENE.

CHAPTER I.

INJURIOUS EFFECTS OF INHALING DUSTY AND POISONOUS SUBSTANCES.

IN the present brief sketch an attempt will be made to present some of the principal injuries which are inflicted on workmen in various trades by the noxious character of their work. Some remarks will also be made upon the number of hours of labor in occupations which are not of themselves especially unhealthy; upon accidents from machinery; and, in conclusion, upon the "expectation of life" in different employments.

The present chapter has to deal with a large number of trades, and many striking facts.

Among those which have excited most sympathy — and which in truth are adapted to do so — are those relating to the deadly effects of certain kinds of dust upon the lungs. The form of consumption which is

thus produced is apt to begin gradually; though in some trades the artisan is affected in a few days. It is not exactly what is known as tuberculous consumption, for it is said that it is not hereditary, and that workmen who are suffering in its early stages are pretty sure to recover if they change their employment for a healthful one. There are a great many kinds of dust inhaled, and the effects are not all alike in the different trades; but, in general, there is a certain set of symptoms.

In "grinders' asthma," for example, there is first an irritant, hacking, dry cough, with a scanty expectoration of whitish, stringy mucus, from simple irritation of the interior of the lungs. This trouble increases in time, and the man becomes weaker, loses his breath easily, and breathes with less vigor; he perhaps begins to spit a little blood. If he leaves his dangerous trade at this point, he will probably recover; if not, he passes into a third stage, where the tissue of the lungs breaks down in spots and is expectorated, leaving cavities; he then suffers from the usual symptoms of consumption, viz.: hectic fever, night sweats, loss of sleep, emaciation, and great difficulty of breathing.

The effect of certain occupations in producing consumption may be estimated by the statement that, while among butchers, tanners, glovers, coopers, and brewers only from 7.9 to 11.2 in 100 have consump-

tion, brush-makers have 49.1, file-cutters 62.2, needle-polishers 69.6, and flint-workers 80, in 100. These figures represent European experience, and are taken from a large number of workmen of all classes entering a large public hospital in Berlin. Expressed in words, they signify that while consumption is, unfortunately, a common disease, and may be expected to destroy ten per cent. of the population (more or less), there are certain trades so terribly noxious by the production of irritating dust, that those who work at them have consumption *from five to eight times as frequently* as is usual in other trades.

It is fortunately the case that great relief can be given by mechanical appliances for carrying off the dust formed in the process of grinding. The stone is boxed in and connected with a flue, which rapidly exhausts the air and its dusty contents from the surface of the stone. Several stones can be connected with one common flue in this way. The draught is produced by a fan driven by a small engine of eight or ten horse-power.

Articles which can be ground wet, as knife-blades, scissors, etc., do not produce this trouble to such an extent; but the artisan is liable to rheumatism and pneumonia from the wetting of his clothes.

Certain articles must be ground dry, owing to the necessity of carefully avoiding rust in the finishing process, as in the case of pins and needles. The

more extended use of machinery, however, in grinding, has of late done away with most of the injury from this form of dust.

File-cutters are still exposed to injury from inhalation of particles. You know that machinery is used to make files; but a better article is turned out by hand.

Stone-cutters, especially cutters of mill-stones, suffer greatly from this kind of consumption; and so do potters. In grinding the materials for earthenware and porcelain and glass, a great deal of the most injurious dust escapes.

In preparing cotton for use in the mill by beating and carding, a vast amount of dust is generated; but a proper arrangement of draughts ought to remove the danger of inhalation.

The breathing of coal-dust in the process of mining changes the color of the entire lung in a few years to jet-black. This blackening of the lung is not confined to colliers, however, for it is always found in *post-mortem* observations of adults, to some extent, in patches of lung-tissue, and seems not to produce, ordinarily, any kind of disturbance. There seems, however, to be no doubt that, when in excess, it may injure a miner's lung, or, at all events, may aggravate other diseases. Provision is commonly made for ventilating mines, which affords considerable relief to this evil.

The chief *poisonous* substances used in the arts and inhaled in the form of dust are *arsenic*, *mercury*, and *lead*.

In the present state of popular knowledge, little need be said of the effects of arsenic in wall-papers. It is quite generally known that almost all shades of color are producible by arsenical preparations, and that such are actually among the most popular for producing the favorite neutral tints of the day,—green paper being scarcely more dangerous than any other. It is not the workmen, however, but the customers, who seem to suffer from contact with the arsenical colors; at most, they have certain cutaneous eruptions and ulcerations.

It is said to be very hard to bring foreign paper-makers to terms on the subject of arsenic. There are importers who faithfully try to prevent the use of such arsenical pigments; and it would be just to second their efforts by legislative action forbidding the use of arsenical wall-papers altogether. But it will not be found an easy task to overcome the indifference of public men to mere considerations of health. Very few persons die of this sort of poisoning, it is true. Instead of dying, the unhappy victim (who is usually unaware of the existence of such a cause) only drags out years of wretched invalidism; and, at last, if removed from the injurious influence, is only ruined in health for the rest of life.

The symptoms of poisoning from arsenical wall-paper are quite various. They include soreness of the eyes, catarrh of the nose, throat, and lungs, dyspepsia and bowel-complaints, eruptions on the skin, and great general depression and debility. It is often noticed that the sufferer is much worse in the morning, after a night spent in the poisonous room. The danger is greatest when the colors can easily be brushed off, and is least when they are protected by a glazing. But it is impossible to say when danger begins; and *no* arsenic should be allowed.

A variety of the papers used for kindergartens has been found to be highly charged with arsenic. There is a green, very popular for this purpose, which almost betrays itself. Can it be necessary to insist that children of the age of four years should not be allowed to handle freely so dangerous a substance?

It is perfectly true that many escape. The same is true of all contagions and poisons, from yellow fever to the lead contained in drinking water. It is necessary to take such measures as will protect those who are susceptible, who are likely to be among the most valuable members of the community. Before wall-papers are purchased, it would be well to have them examined for arsenic. Any chemist, or indeed any intelligent doctor, can easily detect them by Reinsch's test, at least.

An eruption of the legs, painful if not dangerous,

has been known to be produced by wearing stockings dyed red with coralline, a substance which may contain arsenic.

Artificial-flower makers are exposed to the poison of arsenite of copper or the arsenite and acetate of copper—Scheele's and Schweinfurth green; they inhale it, and receive it by contact with the skin. The effects are, characteristically, enfeeblement of the muscular force, especially of the limbs; also a loss of appetite, palpitation, pain in the stomach, diarrhœa, and constant headache.

Mercury is used by hatters to remove hair from skins. A solution is applied to the skin, and, after drying in a chamber, the hair is got rid of by beating or brushing, which liberates a great deal of some mercurial compounds. The effects upon the health are those of chronic poisoning, of which one of the most prominent is that nervous complaint called mercurial trembling.

Mirrors are silvered with an amalgam of mercury and tinfoil, which when heated parts with the mercury in the form of vapor. The process is so very injurious that in a certain French manufactory the workmen worked only six hours in a day, and only on two or three days in a week. The remedy for the trouble consists in abolishing mercury and coating mirrors with silver. A palliative has been found, consisting in the sprinkling of ammonia on the floors.

In fire-gilding, mercury and gold in the form of a paste are applied to the surface, and the mercury volatilized by heat; this gives a much more solid and enduring surface than electro-plating, and the dangerous steps of the operation can now be conducted in closed boxes.

Both mercury and arsenic are driven off by heat in the process of roasting certain ores. Mercury seems to be very much the more dangerous to the health, causing sore mouth, loss of teeth, general debility, or "cachexia," acute pains, sleeplessness, spasm and tremor, and paralysis of the muscles, and intellectual feebleness, besides some symptoms resembling those of syphilis, eruptions, swellings over the shin-bone, and glandular enlargement, with deep ulcers of the mouth and nose. Altogether, the occupation of those who are forced to inhale mercury is one of the very worst.

Lead is a very common poison—one of the most common. Its poisonous effects are felt by workers in lead-mines, by painters, by those who grind and polish flint glass containing lead, by enamellers, and to some extent by type-founders and printers. Those suffer most who have to do with the process of dry-grinding colors. The "body" which lead gives is so much thicker than that of zinc that the latter does not supersede it. You may have seen cases of the colic which occurs in lead-poisoning. There is an-

other symptom which is more disabling, consisting in a palsy of the muscles, usually beginning with those which enable a person to open his fingers and throw the hand back, so that subjects of this palsy go about with their wrists drooping like those of a kangaroo or a begging dog. In fact, it is popularly called "wrist-drop."

But there are a great many other substances which produce poisonous or other deleterious emanations.

There are the irritating vapors of ammonia, chlorine, and several acids—sulphurous, hyponitric, nitric, hydrochloric, and hydrofluoric acids.

Etching produces fumes of hyponitric acid when done upon metal, and of hydrofluoric acid when done upon glass. Both acids are corrosive; the latter is excessively so, and affects the eyes, the air-passages, and the hands.

Bleaching produces fumes of chlorine gas, which is not injurious in small amounts; nor is the sulphurous vapor from straw-hat bleaching of much consequence.

The manufacture of various chemicals is injurious to workmen.

Those who make sulphate of quinia are liable to an eruption which resembles eczema, not compromising life or health, but in some cases preventing workmen from continuing at the trade.

The manufacture of potassium bichromate disen-

gages caustic vapors, which destroy the mucous membrane of the nose and produce rapid-eating ulcers of the skin.

One of the most terrible of diseases is produced by inhaling the fumes of phosphorus in the process of making matches — a necrosis or death of portions of the upper and lower jaw-bones. A surgical operation is required for the removal of such dead bone. It is, fortunately, often successful, at least as to life; but an infinitely better method is the preventive one.

In addition to this, the fumes of phosphorus produce catarrhs of the lungs and stomach in almost all the workmen; they lose appetite and become pale, and weak, and thin. There are several precautions which should be observed, but the chief one is the substitution of a kind of phosphorus — the amorphous — which is not poisonous when swallowed, and does not give off vapors, as common phosphorus does, at the ordinary temperature of the air.

Women suffer more than men from several of the poisons we have named. They not only lose their health more readily, from a greater susceptibility to morbid influences of certain kinds, but their sexual system is very liable to be injured. "They are much more susceptible than men to the influence of mercurial vapors, and those who are poisoned abort frequently, and even the children that are born to them are apt to be weak, sickly things, and die early."

The infants of female operatives in certain branches of china-making are almost all scrofulous, with an enormous mortality. Lead affects women more readily and more seriously than men. They suffer from excessive flowing at the monthly period, and have frequent abortions. With regard to workers in tobacco, it is stated by Tracy, of New York, that they have very small families; quite the reverse of what is usually the case with working-people. He found only four hundred and sixty-five children in three hundred and twenty-five families. It is not certain what the cause of this peculiar condition may be; but it is quite probably due in large measure to a premature commencement of work, and to an influence which tobacco has in checking the sexual development of young girls.

Tobacco is such an interesting subject that it is hard to avoid saying more. It will be safest, however, to say but little, for we know that the whole subject of tobacco is to some extent an open one. It is hard to prove that the drug is injurious to health in the case of most adult persons who chew or smoke it, or of most operatives; but there are some who are seriously, if not permanently, injured by it; and it is certainly desirable to keep young persons under sixteen from its use.

The chief practical points, in the prevention of disease arising from dust, whether poisonous or not, are:

1. Removal of dust by ventilators, mechanical fans, etc. This is enjoined by the English law of 1878.

2. Wet-grinding, grinding in close vessels, etc., is sometimes practicable.

3. The wearing of masks over the face, composed of wire-gauze, wire frames covered with tarletan, respirators of carded cotton, etc.; but these are hot and irksome.

4. If working with poisonous substances, the workmen should wash the exposed parts — face, hands, hair, beard — on leaving work, especially before eating, and should never eat in the work-room. After work, they should change their outer clothes, and a daily bath is very desirable in some occupations. To protect from lead and other dusty poisons, a linen suit, frequently washed, may be worn.

The effects of certain poisons on the female sex and on children are so injurious that special laws are required to restrict their employment in manufactures where poisons are used. The restrictions of the English Factory Act of 1878 are as follows:

No woman, or person under sixteen, shall take meals in any part of glass-works in which the materials are mixed, or where flint-glass is made, or where grinding, polishing, or cutting is carried on; or in any part of lucifer-match works in which any manufacturing process or handicraft (except that of cutting the wood) is usually carried on; or in the dippers'

room, dippers' drying-room, or china scouring-room, in any earthenware works.

There is absolute exclusion from labor in the following cases: girls under sixteen, not allowed to be employed in an establishment where bricks or tiles (not ornamental tiles) are made or finished, or salt is made or finished. No child under fourteen to be employed in a part of the building where dry-grinding in the metal trade, or the dipping of lucifer-matches, is carried on; under eleven years, all metal grinding is forbidden, and fustian cutting. Persons under sixteen are forbidden to work at silvering mirrors by the mercurial process, or at making white-lead. Children under fourteen and girls under fifteen are excluded from parts where the process of melting or annealing glass is carried on.

CHAPTER II.

INJURIES FROM ATMOSPHERIC CHANGES.

THE unquestionable benefit which free exposure to the air in all weathers confers is subject to certain drawbacks. It is not necessary to consider sunstroke, in the case of day-laborers, nor accidents by falling from roofs, or from railroad collisions, as forming an element in "industrial hygiene;" but there are certain causes which affect the health permanently, as bronchitis and pneumonia; and to this may be added a liability to paralysis of the facial nerve, which is especially the possession of drivers of carts, etc.

Bronchitis and rheumatism are common enough also among those whose trade exposes them to great heat, as blacksmiths, stokers on steamships, forgemen, puddlers, glass-blowers, dyers, and washerwomen. It is, in fact, neither heat nor cold that causes the trouble, but excessively rapid transitions from heat to cold.

The trade of baker is apt to be very unhealthy, owing to the confined, close, dark, overheated quar-

ters in which it is carried on; also the night-work, and occasional excess of work.

There is a peculiar and interesting class of disease which attacks those who work in diving-bells or caissons. It is caused by the excess of atmospheric pressure which exists under water, which may equal several times that to which men are exposed on land. The symptoms do not, however, attack the laborer on going down, but rather on leaving work. The case, in fact, is parallel to that of the aëronaut when he rises in his balloon, or the climber of mountain peaks. The symptoms, dependent upon the removal of pressure, are as follows: Extreme pain; sometimes nausea and vomiting; sometimes paralysis; sometimes headache and dizziness. They are frequently associated with a sudden rush of blood to the brain and spinal cord. The precautions to be observed are quite interesting. It is recommended that only wiry men be selected for the work; that their time of labor be shortened in proportion to the pressure; that they take all possible care of themselves, never going to work on an empty stomach, eating meat and drinking coffee, and, when coming out of the caisson, taking time to do it gradually, passing into an intermediate atmosphere first, and resting an hour afterwards.

Miners.—The health of a miner is exposed to special causes of injury. In addition to the danger of being blown up, or knocked down by falling

stones, he is constantly at work in the presence of great masses of minerals which generate noxious gases,—not to mention the effluvia which arise from his own person, the flame of his candle, and the burning of powder. To this is added, in many cases, an excessive heat, often a steaming, sultry heat, or else a continual cloud of dust proceeding from the coal or rock under the blows of his pick. And if we further consider the confined position in which he often works, the excessive exertion, the exposure to draught, and the total deprivation of sunlight, we shall be ready to admit that his life is an unnatural one, and full of singular risk.

But man can adapt himself to almost anything. With proper precautions, it is said that the life of a miner is almost as safe, and his health quite as good, as those of other classes in general; better, in fact, than those of his own family. If this be so, it is certainly a great triumph of the hygienic art.

The precautions to be taken relate first and foremost to ventilation.

"Fire-damp" is a name given to light carburetted hydrogen, which is given off abundantly in the carboniferous strata and in enormous quantities from the Pennsylvania gas-wells. In the English coal-mines it is much more abundant than it is at present with us. When mixed with seven or eight times its own volume of common air, it is highly explosive. After

an explosion, the passages are filled with the irrespirable mixture of nitrogen, carbonic acid, and the vapor of water, resulting from its combustion.

"Choke-damp," or "black-damp," is a name for carbonic acid, a common product of most combustions, and of respiration. It abounds in badly-ventilated mines Nitrogen is not a poison, by itself. Carbonic oxide, however, is one of the most dangerous of poisons, and so is sulphuretted hydrogen when present in any considerable quantity. Both the latter are called "white-damp."

The heated flue, as a means of exhausting air from mines, has obvious dangers in coal-mines; and its special disadvantage lies in the variations which different atmospheric conditions produce in its working.

The steam-fan, driven by a small engine, may be used either for drawing air from the mouth of a mine or for forcing it in through tubes to the places where it is most needed. It is, altogether, the best means of ventilating mines.

Another reason for supplying abundance of fresh air to mines is furnished by the great heat which is found under ground. In the Cornish mines, the temperature is said to increase regularly about one degree Fahrenheit in every fifty feet in the upper parts, and one in every eighty-five feet in the lower parts; and this is, with local exceptions, nearly the rate at which the temperature rises in other mines. Some of the

exceptions, however, are very remarkable. The deep levels of the mines on the Comstock Lode in Nevada have temperatures varying from 105° to 130° Fah.; and this excessive heat is mitigated by blowing upon the men fresh air at 90° or 95°, which seems to be most conducive to comfort. The men, under these circumstances, work with great vigor, but have to be frequently relieved.

This great heat is said to be very productive of heart-disease. There is no doubt that this effect is intensified by excessive barometric pressure and by dampness of the air, preventing evaporation from the body. It is affirmed that the system in use at the Comstock is so thorough as to do away with most of the danger from all of these sources.

To spare the men a needless and wasteful expenditure of bodily force, it has been found best to use cages worked by engines to raise and lower those who are going to or from work.

The excessive quantity of coal-dust which chokes the air of badly-ventilated mines has been previously alluded to as affecting the lungs. But there are other causes of pulmonary trouble, quite obvious in their nature, such as sudden changes from heat to cold, and deliberately sitting down in draughts to cool off after working in the high temperatures mentioned. On the whole, the principal diseases are miners' asthma, consumption, and rheumatism, and, among those

who have worked long in badly-ventilated places, dyspepsia, tremors, vertigo, and other troubles arising from blood-poisoning.

As regards accidents, they are due to a great many various causes; but more than one-half of them, in the Pennsylvania coal-mines, are caused by falls of rock, coal, or slate. It is the opinion of good judges that a very large number of these casualties could be avoided by sufficient timbering of the roofs and sides. One and a quarter in every hundred, or 12½ men in every 1000 employed in these mines, are killed or wounded every year by accidents; and it seems that here is a distinct and obvious field for a humane reform, either by legislation or by private effort.

Soldiers and Sailors.—In most of the European services great numbers of the men used to die of consumption and allied diseases, and fevers, probably chiefly typhoid. This lamentable result was not in the least due, however, to exposure to weather, but to what may be called a contrary condition—the want of fresh air in barracks. In certain of the best English regiments the losses were from one-third more to twice as great as among men of the same age in civil life. The fearful loss of life from disease in the Crimea is well known; and it is from that time that the reforms date which have brought down the total rates of death from disease to one-half of what they were. The

present allowance in England is 600 cubic feet of space to each man in barracks.

The ills of sailors are, to a very great extent, caused by want of fresh air, dirt, and dampness. It is commonly forgotten that, by washing down the deck frequently, a source of disease is introduced which is at least as dangerous, and in feverish localities ten times more dangerous than simple dry dirt. Good ventilation and scrubbing and *drying* are the cure for the chief of the curable ills of ship-life.

CHAPTER III.

INJURIES FROM OVER-USE OF CERTAIN ORGANS.

IT is as true of the mind as it is of the body, that no one part can be exclusively used without injury to the individual considered as a whole. In the broadest possible division of our being, neither "mind" nor "body" has a right to exclusive cultivation; and such exercise is never in the interest of the best physical health. The same is true if we subdivide the faculties of body and mind. There are many ways in which the mind is exercised in daily life: book-study, concentration of attention on discourse, memorizing, reproducing, extemporary discourse; attention to great single questions in business, and to multitudes of petty ones; ciphering and copying by the day, and the vivid, sudden, mortal collisions of the street. None of these can properly be kept up to the exclusion of the others, unless there is a strong predisposition and fitness on the part of the individual: they should alternate with one another, for most persons are incapable of sustaining continued strain in one of these points. We say that "worry" kills a man;

but in saying so we mean simply that the mental excitement upon one subject, which is perfectly healthful if continued for a few hours, becomes tyrannical and destructive if kept up for whole days. A man may be worried into illness by incessant, quiet cipher-ing as well as by attendance at the Brokers' Board.

The care of the mental health has been sufficiently treated of in another of this series of Primers.* It is my purpose here briefly to mention some muscular affections which are caused by monotonous and excessive work.

The robust activity of the blacksmith and carpenter do not exempt them from the general law. They are liable to a disease termed "hammer-palsy," affecting the muscles which are overworked.

A painful and very unfortunate affection sometimes attacks those who write a good deal. The premonition is given sometimes by pain in the muscles employed in holding the pen. There is apt to be a nervous condition of the system, a tendency to anxiety; but this is not always the case. As seen in its typical form, the disease presents no token of its existence until the person affected begins to perform one special act, as, in the present instance, the act of writing. There may be great muscular vigor, and complete control of all the faculties and motions

* "Brain-Work and Overwork," by H. C. Wood, M.D.

except one; but as soon as the patient undertakes to grasp the pen and write, he finds his fingers in a state of cramp; they pinch the pen excessively, or they fly back from the pen, making it impossible to hold it. It is very desirable that this should be recognized in an early stage, as it is a malady somewhat difficult of cure, and absolutely disabling as respects clerical work. Some reader may thank me for saying that electricity has been applied of late with good success to the treatment of Writer's Cramp or Palsy.

The affection here described is not confined, however, to writers, but affects also pianists, violinists, engravers, seamstresses, telegraph-operators, tailors, type-setters, and many other classes who use one set of muscles almost exclusively.

The theory has been put forward that writer's cramp is caused by an electric current generated in a metallic pen, or by the contact of pen and holder. This cannot be admitted. The disease is fundamentally the same, whether caused by work with the pen or on catgut or ivory. But a steel-pen may be found injurious, and can be replaced by gold or quill; or a large pen-holder may be used, made of cork, of the size and shape of a large cigar, which is felt by many to be a great comfort in writing. A departure from the prescribed mode of holding the pen, and placing it between the forefinger and the middle finger, may also be a relief. Dr. Frank Woodbury, of Philadel-

phia, has lately invented an ingenious pen-holder to prevent writer's cramp, by regulating the pressure at which the pen is used by a slight spring. But if the disease has developed itself, no such palliation is of any avail; and if the sufferer learns to write with the left hand, as has been done, the left hand also is liable to be attacked. The temporary use of the "type-writing machine" will often prove a great boon, permitting a continuation of work while resting the affected muscles.

The effect of using sewing-machines is sometimes injurious. It is not worth while to mention any special effects. The muscular exertion, however, is of a monotonous character, and may produce muscular fatigue which is prejudicial to the general health. It has been known to cause neuralgia of the foot and leg. In general, the use of the machine two or three hours a day is probably beneficial to most women; but a whole day's work, if the machine is run by the feet of the worker, is far too severe, and steam-power had better be used. Much has also been done by applying the principle of alternate effort, by a treadle which is moved both by the downward and the upward movement of the feet, and employs both feet at once or one at a time, at will. Many will find relief by alternate basting and sewing each for twenty to thirty minutes.

Steam-power has been applied with success to run-

ning sewing-machines. I am told by the head of a large manufactory of ladies' dresses that the machines do one-third more work than when run by the foot; and that the girls will work for less wages when steam-power is used.

Those who use the voice a great deal in public speaking and singing are apt to suffer from the strain. The most common affection is follicular pharyngitis, or "clergyman's sore-throat." Much of this trouble is unnecessary, strictly speaking, or could be remedied if the right steps could be taken. The voice ought not to be used for continued and difficult efforts, unless the possessor is in good health and strength. It ought not to be used in the crude, ignorant, and even unintentionally "affected" manner which is often heard, and which fatigues the throat without need. The services of a competent teacher in elocution are to be desired, not so much for rhetorical purposes as for training in the right way to work with the vocal organs. And by way of support, a little gymnastics, for developing the chest, shoulders, and abdomen, may properly accompany the process of developing the voice, in some cases.

This is a fit place for a brief mention of the injurious effects of protracted labor in one position. Shoemakers and tailors, owing to their constrained attitudes, and the bad air of their shops, become dyspeptic, anæmic, and consumptive, and do a great

deal more thinking than is good for them. The sedentary life of literary people and clerks is apt to affect them similarly.

Persons who stand all day at their work, as salespeople and hair-dressers, are apt to have pains in the soles of their feet, which may sometimes be relieved by a well-shaped steel-shank to the shoe. Varicose veins of the lower limbs, and uterine irregularities, are also caused by standing. It is a truly inhuman thing to require girls and women to remain on their feet all day, without regard to the presence or absence of customers — an inhumanity that we are glad to believe is diminishing.

CHAPTER IV.

INJURIES FROM ACCIDENTS.

A VERY considerable number of accidents are caused every year by machinery used in manufacture. In England, in 1875, 2.6 persons in every 1000 factory-hands were injured in this way. In the United States there were 420 reported deaths caused by machinery in 1870, and the number of injuries was of course very much greater.

The English Factory Act appoints inspectors, who must not be interested in or connected with factories in any other way, and who are invested with the necessary powers for carrying the act into effect.

Some of the provisions of the act are here given, from an abstract published in Professor William Watson's paper in the Journal of Social Science, No. XI.

Certain portions of a mill, as hoists, fly-wheels, wheel-races, mill-gearing, vats, etc., are required to be fenced, and whenever the machinery, by reason of its character or situation, is, in the opinion of the inspector, likely to cause accidents to the work-people, he is to serve on the occupier a notice

requiring him to fence the part of the machinery which he deems to be dangerous. The occupier may, by serving a requisition on the inspector within seven days of the receipt of the notice, refer the matter to arbitration.

A child (under fourteen) is not allowed to clean any part of the machinery of a factory while in motion. A young person (from fourteen to eighteen) or woman (over eighteen) is not allowed to clean such part of the machinery as is mill-gearing, while the same is in motion. A child, young person, or woman is not allowed to walk between the fixed and traversing part of any self-acting machine while the same is in motion.

Accidents causing death, or disabling the person more than forty-eight hours, must be reported to the inspector and visiting surgeon by the occupier of the factory or workshop. The surgeon is to examine at once the nature and cause of the accident, and report to the inspector within twenty-four hours.

Neglect to keep a factory or workshop in conformity with the act is punishable by a fine not exceeding £10; and the court (of summary jurisdiction) may inflict a fine, not exceeding £100, for the benefit of the injured person or his family, or otherwise, in case of death or injury in consequence of neglect to fence machinery as required.

Professor Watson, in the same paper, gives a very

interesting account of an Association for the Prevention of Factory Accidents, existing at Mulhouse, in Alsace. It consists of twenty-four members, comprising mill-owners, superintendents, manufacturing engineers, foremen, and workmen chosen by the Industrial Society of the city, with the aid of the workmen. The Association offers arbitration, in cases of claims for damage, and uses various means for spreading a knowledge of the dangers and their remedies. At the Paris Exposition of 1878, they exhibited twenty-seven examples of contrivances adapted to prevent very severe accidents such as commonly occur, especially from belts, shafts, pulleys, wheels, and circular-saws. It would be well if our employers of labor in large manufacturing centres, such as Philadelphia, Fall River, Lowell, etc., would imitate this humane example.

Railway accidents may be properly mentioned in this place, for they affect the employés in vastly greater proportion than the passengers. For instance, in France, from 1854 to 1869, the number of travellers killed and wounded on railroads was 2,832; but that of employés was 11,908. If we consider how few men are required to run a train carrying hundreds of passengers, we cannot help being struck with the great disproportion.

CHAPTER V.

REGULATION OF HOURS OF LABOR.

THE application of machinery and steam-power to the manufacturing arts has made England the richest country in the world. But this wealth was attained, at first, at a cost of human suffering and death which makes a sad page in history; a page which, fortunately, has not been paralleled in our country. No system of labor has existed here, upon a large scale, by which a boy of eight years could be carried daily to work for sixteen hours in a mill, with half an hour for meals. We have not seen large numbers of little children beginning a full day's work at six years of age; nor have we frequently seen the consequent distortions and deformities known in England as the "factory-leg," due to standing an excessive length of time. No large numbers of women here work all day, leaving little infants in the charge of baby-farmers.

It is useless to expect that these things will always go right of themselves. The absence of legislation on hours of labor, for the protection of women and

children especially, is excusable in some of our States, on the ground of the subordinate nature of the industry. But the want of uniformity which is seen in the laws of States which have attempted statutory regulation is a little startling, and obliges us to infer that American views are not so definite on some practical points as they might be.

From a communication sent me by Dr. Roger S. Tracy, of the New York Board of Health, I compile the following statements, which will give a nearly complete idea of what has been done hitherto. Dr. Tracy examined the statistics of the twenty-eight principal States, and found the following: —

Factories.— Labor forbidden to children under 10 in Massachusetts and New Jersey; under 12 in Rhode Island and Wisconsin; under 13 in Pennsylvania.

Coal-mines.— Labor forbidden to children under 12 in Pennsylvania; to children under 12 and all women in Illinois, and under 14 in Colorado.

Factories.— Over ten hours' work daily forbidden to children under 14 in Michigan; 15, in Connecticut; 16, in Maine and Maryland; 18, and all women, in Ohio.

Factories.— Over eight hours' daily work forbidden to all under 18, and to all women, in Wisconsin.

Educational requirements are made in eight of the twenty-eight States. The strictest are those of Wis-

consin, where children are not to be employed while the public schools are in session.

This is about all that has been done in our country for the protection of women and children from excessive and improper labor. There are laws relating to the employment of children in fourteen of the twenty-eight States; but a large number of the laws relate to educational and not to sanitary points.

It is certainly a singular discrepancy that, in Massachusetts, parents are allowed to send a child of ten years old to work ten hours in a factory, while in Wisconsin only eight hours of labor are allowed at the age of twelve to eighteen.

The English legislation has been thorough and enlightened, showing upon the part of its authors a degree of humanity, painstaking, and intelligence which go far to atone for previous sins of neglect. Its provisions are as follows: —

Children under 10 shall not be employed in any factory or workshop.

A medical certificate is required, in the case of all persons under 16, of the fitness of such persons for employment in the factory specified. The employer procures this certificate, and is responsible for proving the age. The Government Inspector may require a certificate, if a person under 16 seems to him unfit, and may forbid his working again until recertified by the certifying surgeon. The examination is made

at the factory. Refusal to give a certificate must be accompanied by written reasons.

Persons under 14 shall not be employed on Sunday in workshops or factories. Christmas, Good Friday, and eight half-holidays besides, are given.

Children are employed (under 14) under one of two plans:—(*a*) in alternate sets, morning and afternoon; (*b*) on alternate days. The morning work ends at 1, or at dinner if earlier. The afternoon work begins at 1, or after dinner if later. The day is 12 hours long, viz.: from 6 to 6, or 7 to 7, for children, young persons, and women, with 1½ hours for meals. On Saturday the day ends at 2 o'clock.

Children must not be employed more than five hours continuously without a meal (half-hour). All must eat at the same hour (children, young persons under 18, and women), and never where work is going on.

Every child under 14 in a factory or workshop must attend a school, either on the alternate off-days or on the half-days when off work. If he fails to attend in any week, he shall not recommence work the next week until he has made up his absence from school. The employer obtains certificate of attendance.

The parent selects the school. Proficiency in the elementary studies, which satisfies a certain standard

fixed by Government, enables a child at 13 to work as if over 14,—as a "young person."

The school is authorized to collect its fees from the occupier of the factory, to a certain extent, the amount to be deducted from the child's wages.

It is not in my power to say whether the health of the rising generation is suffering from overwork or confinement in factories in our States. There is not much evidence to prove it. The investigation published in the Massachusetts State Board of Health Report for 1871 is not at all alarming in its results. It found that "the correspondence in death-rates between the factory population and the whole population, at the same ages, was so remarkably close as to leave but little to be said" (page 422).

There is in modern labor a tendency to aggregate persons and resources in great masses, which produces town-life, large enterprises, and great factories. In many ways this is to be deplored; but it is right to see the bright side also. The old system of independent workshops, where the weaver or other mechanical toiler spent all the time he could possibly give in small, crowded shops, often in his own room, in narrow and nasty quarters at the best, has given way to the system of large shops, which are run for a much smaller number of hours, are far better lighted and warmed and aired, and, what is perhaps the root of the whole matter, are much more accessible to the

control of public opinion and to legislative inspection. It is in the large shops that you find the large brains at the counting-desk — men who can understand sanitary needs, and are not hampered by the petty necessity of domestic economy which weighs down the solitary workman. It is the large establishments that take the trouble to answer questions upon sanitary matters addressed to them by the State authorities.

CHAPTER VI.

DURATION OF LIFE IN VARIOUS OCCUPATIONS.

AS everybody would like to know that he has a prospect of long life, everybody has a certain curiosity in regard to the statements of science concerning the effect of his own work on the duration of life. There are a good many facts going the rounds, and if taken with allowances for the circumstances, these facts are valuable. But there is so great a contradiction between the statements of different authors, that the most meagre statements are, perhaps, the safest.

From Hirt's tables I select a typical trade or two to represent each period of life, dividing life into periods of five years. My selection is, of course, arbitrary.

Among the operatives who die on the average before the age of 40 years, I find porcelain-turners, stone-cutters, and female mirror-makers.

Under 45, goldsmiths, lead and quicksilver miners.

Under 50, cabinet-makers and operatives in cotton-mills — not very wholesome, and not particularly hurtful occupations.

Under 55, to my surprise, come some trades which I should have put much lower. Needle-polishers are

said to average 50, file-cutters 54, engravers 54.6, and so forth. It is possible that a good many classes fall in here simply because it is rather a medium age at which to die, independently of other circumstances.

Under 60 years (also a good *medium* age, on the favorable side,) we find blacksmiths, butchers and carpenters, machinists and turners, the watchmaker who measures our life for us, and the grave-digger who takes our measure for the last time.

Under 65, it is interesting to find set down the classes of tanners, dyers, gas-men, catgut makers, and bone-boilers — trades which may remind us that long life is not to be attained by shirking disagreeable or offensive tasks.

Above 65, only three trades are mentioned.

In England, the rates of mortality among different classes have been estimated by Dr. Farr, who states that the shortest lives are found among earthenware-makers, tailors, needle-makers, makers of files and saws, veterinary surgeons and farriers, railway employés, coachmen and cabmen, commercial clerks, butchers, publicans, innkeepers. A good deal of this mortality is due to habits of excessive drinking and exposure to the weather.

Physicians and surgeons, chemists and druggists, mercers and drapers, hair-dressers, barbers, wig-makers, and hatters, miners, and some others, have a high, but not an excessively high, rate of mortality. Carvers and gilders suffer less than they did; and manu-

facturers of wool, silk, and cotton no longer experience an exceptionally high mortality, owing to the zealous efforts made by Lord Shaftesbury and his enlightened colleagues in promoting sanitary legislation.

Among the healthy classes may be named carpenters, wheelwrights, and workers in wood generally; shoemakers, grocers, publishers, and booksellers.

Among the healthiest and longest-lived are the agricultural classes, game-keepers, barristers, and the clerical profession. But solicitors and Catholic priests in middle and later life form exceptions.

Metal workers, in the aggregate, do not experience the average rate of mortality under 45, but after this age the case is reversed; miners have a still higher rate, and both classes have a much higher rate than agricultural laborers.

From the "Massachusetts Registration Reports" I will quote the following statement of the average age at death of nine general classes of men, the average of all classes and occupations being 50.94 years:

		Average Age at Death.
I.	Cultivators of the earth . . .	65.13
II.	Active mechanics abroad . .	52.62
III.	Professional men	50.81
IV.	Merchants, financiers, agents, etc. .	49.22
V.	Active mechanics in shops . .	47.92
VI.	Laborers, no special trades . .	47.24
VII.	Employed on the ocean . . .	46.09
VIII.	Inactive mechanics in shops . .	43.64
IX.	Factors laboring abroad . . .	35.42

NOTE.

THE following works on gymnastics may be named as useful:

Manual of Gymnastic Exercises, arranged on Hygienic Principles and adapted to music. By E. H. BARLOW. Amherst, Mass., 1866.

Manual of Gymnastic Exercises for Schools and Families. By SAMUEL W. MASON. Boston, 1863.

Handbook of the Movement Cure for Prevention of Spinal Deformities. By M. ROTH.

How to Get Strong, and How to Keep so. By WILLIAM BLAIKIE.

Training in Theory and Practice. By ARCHIBALD MACLAREN.

INDEX.

PAGE

Abortion caused by mercurial poisoning 116
—— from lead poisoning 117
Accidents 133–135
—— legislation to prevent. 133, 134
—— precautions 134, 135
—— on railways 135
—— in mines 125
Adams's statistics of distorted spines 37
Afternoon schools 61, 62
—— study 21
Age, as determining capacity for study 31, 32
Air, quality of supply for furnace 86
—— overheated 86, 87
—— from cellars 91
—— See Ventilation.
American desks and seats for schools 67
—— factory and mining legislation 137
Amherst College gymnastics 44
—— statistics of near-sight 58
Anxiety injurious to health 14
Apparatus for gymnastics 36
Appetite, failure of, sign of over-study 19
Application, capacity for continuous mental, at different ages.. 30
—— See Study.
Architectural ornament subordinate to hygienic requisites 84
Arsenic in wall-paper 111, 112
—— chronic poisoning, symptoms 112
—— in kindergarten paper 112
—— in stockings 113
—— in artificial flowers 113
—— in certain ores 114
Astigmatism mistaken for short-sight 55

PAGE

Atmospheric changes, injury from 120–126, 143
Attention, power of, at different ages 30

Back, support for 68, 78
Bakers 120
Base-ball, when injurious 38
Bigelow, H. J., on chairs 68
Blackboards, position 83
Black-damp 123
Bleaching 115
Boarding-schools, some good effects on health 23
—— See pages 98–101.
—— for girls 100
Boards of Health, duty in contagious diseases in schools 100
Bodily development, when complete 35
—— growth 24–27
Book-rest 70
Bowling, when injurious 39
Boys, rate of growth 24
Brain, constant repair of 28
Breakfast neglected by children.. 17
—— study before 20
Bronchitis 120
Brooklyn, statistics of near-sight 58
Brown, Buckminster, injury caused by military drill 46
—— —— on origin of spinal deformity 64
Buffalo, statistics of near-sight... 58

Caisson disease 121
Calisthenics 36
—— specimen of 46
Carbonic oxide from furnace 87
Carter, Brudenell, on care of eyes 48

PAGE
Carter, Brudenell, on near-sight. 60
Catarrhs 93
Cellar air 91
—— water-closets in 96
Chadwick, Edwin, on hours of study 29–31
Chair-back, main use 68
Children, mental characteristics 7, 29, 30, 31
—— requirements in exercise 35
—— bodily peculiarities 61
—— sickliness owing to mothers' trade 116, 117
—— legal restrictions on labor 119, 134–137, 140
—— See Ages.
China-makers, scrofulous children 117
Choke-damp 123
Cincinnati, statistics of near-sight 58
City life, injurious to health of children 27
Clarke, E. H., on sex in education 26
Clergyman's sore throat 131
Closets for scholars' clothing 84
Clothing 40, 44, 47, 93
Coal-dust inhaled 110
Cohn's statistics of near-sight 57
Colleges 102–104
—— for girls 100
—— study in 32
Color of walls 83
Commons at college 104
Competition between girls and boys 25
Comstock lode 124
Congestion as a cause of near-sight 53
Conjunctivitis 63
Conklin, effect of school-life on eyesight 59
Consumption caused by inhaling dust 107–110
—— among miners 124
—— —— soldiers 125
Contagious diseases 105, 106
—— —— of eyes 63
Coralline 113
Cotton-mills, dust 110
Croquet, how injurious 39
Cubic space required in school-room 89
PAGE
Cubic space for dormitories 99
—— —— in barracks 126
Culture, its true scope 10
Curvature. See Spinal.

DAMPERS of furnace 86
Danneberg on gymnastics, at Frankfort 43
Dayton, Ohio, statistics of near-sight 58
Deafness often misunderstood by teachers 49
Decoration of school-room 83
Deformities from factory-work 136
—— See Spinal.
Derby, Hasket, statistics of near-sight 58
Desks, faulty construction 65, 66
—— height of 74
—— assorted sizes 74
Development. See Growth.
Diet of school-children 17
—— See Food, Commons.
Dinner, time for 21
Discomfort as a cause of deformity 66
Discontent, effect on health 14
Disinfection 105
Distance for reading, etc. 49, 53, 54
Diving-bells 121
Dormitories in schools 99
—— in colleges 104
Drawing 57
—— bad position in 64
Dress for gymnastics 40, 44
—— See Clothing.
Drill of scholars 95
Drudgery of schools 15
Drunkenness, mortality from 143
Duration of continued mental application 31
—— of life in various occupations 142–144
Dust, poisonous 111–119
—— prevention of 109, 110, 117, 118
Duty, unregulated sense of 8, 11
—— training of sense of 9

EARTHENWARE makers 110, 143
Education, principles and theories of 7, 13
—— claims the whole child 8, 10

PAGE
Education should include morals and health..... 9, 10
—— should develop power, endurance, self-control..... 11
—— should develop spontaneity 29
—— See Study.
Educational legislation..... 137–139
—— See Half-time.
Elbows on desk..... 70
Embroidery..... 57
Emotional strain upon pupils..... 14
Emulation, its power..... 8
—— injury from..... 8
—— methods of arousing it..... 16
Enamellers..... 114
England, half-time system..... 32
—— disease among factory-hands 136
English Factory Act of 1878..... 118, 119, 133, 138–140
Engravers..... 129
Equilibrium of mental powers, when disturbed..... 14
Erismann on size of school-room.. 79
Etching..... 115
Eulenberg's statistics of distorted spines..... 37
Evaporation of water..... 87
Examinations of schools..... 17
Excess of study defined..... 28
Exercise, physical..... 34–47
—— adapted to different temperaments..... 34
—— by walking..... 34, 35
—— by play..... 38
—— J. J. Putnam on..... 38
—— by military drill..... 46
—— See Walking, Gymnastics, etc.
Exhibitions of schools..... 16, 17
Explosion of gas..... 122
Eyes of young children allowed to wander..... 61
—— care of..... 48–63
—— ignorance of teachers about 48
—— Brudenell Carter on care of. 48
—— near-sighted..... 48, *et seq.*
—— distance from book... 49, 53, 54
—— effect of general weakness of disease upon..... 52
—— See Near-sight, Weakness, Far-sight.

FACTORIES, English..... 136
—— American..... 137

PAGE
Factories, health of operatives... 140
Farr on life statistics..... 143
Far-sight..... 62
—— simulating near-sight.. ...51, 55
Fatigue not the prime object of exercise..... 34
Fevers, prevention of spread..... 105
Field-sports..... 34
File-cutters..... 110, 143
Fire-damp..... 122
Fire on the hearth, principles of 88
Fireplace, aid to ventilation.. 88, 98
—— See Open Fire.
Floor of school-room..... 84
Follicular pharyngitis..... 131
Food..... 19, 23
—— trashy..... 22
—— suitable..... 23
—— deficient supply..... 22
—— See Commons, Meals.
Frankfort, public school gymnastics..... 41–44
Furnace, supply of air to..... 86
—— valves..... 86
—— should be large..... 86
—— dampers..... 86
—— producing carbonic acid..... 87
—— water for..... 87
Furniture for schools. See Desks and Seats.

GAS-LIGHT, ventilation of..... 87
Gas. See Explosion.
German school-seats..... 67, 68
Gilders..... 114
Girls, rate of growth..... 24
—— competition with boys..... 25
—— about age of 14 and 15, special care of..... 25, 26
—— injured by "society" 26
—— choice of gymnastics for..... 43
—— should not have to climb many stairs..... 95
Glasses should be worn by some children..... 60, 63
—— to be selected by physicians only..... 63
—— when to be worn by children 69
Glass-makers..... 110, 114
Grinders' asthma..... 108
Grinding, wet and dry..... 109
—— glass..... 114
—— colors..... 114

PAGE
Ground glass..... 83
Growth of body..... 24, 27, 35
Gymnastics, Ling's system of..... 41
—— for girls..... 43
—— in Amherst College..... 44
—— in normal schools..... 44
—— in colleges..... 102, 104
—— precautions in..... 103
—— teacher for..... 103
—— for boating-men..... 103

HABITS of health taught in school..... 9
Hair-dressers..... 132
Half-time system of education in England..... 32, 62, 139
Hammer-palsy..... 128
Harlan, diagram to illustrate near-sight..... 50
Hatters..... 113
Health, laws of, taught in schools..... 9
Heart-disease in miners..... 124
Heat of mines..... 123
Heating. See Ventilation.
High-schools, study in..... 32
Hirt's life-statistics..... 142
Holidays in factories..... 139
Horseback exercise sometimes injurious..... 39

IMMORALITY in schools..... 99
Inhalation of dusty and poisonous substances..... 107, 119
Ink, pale, bad for eyes..... 57
Inspection of schools by medical authority..... 45, 106
Irksome tasks..... 15

JANITOR'S duties..... 91
Juvenile labor on half-time system..... 32

KEEN, W. W., ventilation..... 92
Kindergartens..... 29, 35
—— green papers..... 112
Königsberg, statistics of near-sight..... 58

PAGE
LEAD-POISONING..... 114, 115
Lead, effects on women..... 117
Legislation. See English Factory Act, Restrictions, Women, Children, Education.
Length of life..... 142
Liebreich, construction of desks and seats..... 67, 77
—— on spinal curvature..... 74
Life, duration of..... 142, 144
Light, defective, causes stooping 69
—— horizontal useless in reading..... 81
—— what constitutes good..... 82
—— dazzling eyes at work..... 83
—— direct rays of sun..... 83
—— artificial..... 83
—— in private house..... 98
—— See Windows, Shades.
Ling's system of gymnastics..... 41
Long-sight. See Far-sight.
Loring, E. G., and R. H. Derby, statistics of near-sight..... 58
Lot, size of, for school..... 94, 95
Lunch for children in school..... 22
Lungs affected by inhaling dust, 107, 110

MAINE ventilation..... 92
Maps..... 56, 57
Masks to protect from dust..... 118
Massachusetts Registration Report on average age at death.. 144
—— State Board of Health on prevention of spread of contagion in schools..... 106
—— State Board of Health on health of operatives..... 140
Matches..... 116
Meals, interval between study and..... 20
—— intervals between..... 21
—— sleepiness after..... 21, 22
—— in factories..... 139
Medical inspection of schools, 45, 106
Mental application, excess defined..... 28
—— characteristics of children... 7
—— depression a symptom of over-study..... 15
—— See Study.
Mercury, effect on hatters..... 113
—— —— mirror-makers..... 113

PAGE

Mercury, effect of on gilders 114
—— symptoms of chronic poisoning 114
—— effect on women..... 116
Military drill in schools..... 46
Miners..... 121, 125, 143
Mirror-makers 113
Morality taught in schools..... 8, 9
Mulhouse, Association for the Prevention of Factory Accidents 135
Muscles, affections caused by over-work..... 128
Music, practice..... 101
Myopia. See Near-sight.

NEAR-SIGHT defined..... 49
—— tends to increase 49
—— diagram..... 50
—— prevention of increase... 50, 52
—— things mistaken for it.... 51, 54
—— causes of..... 51, 53
—— inheritance of..... 51
—— pathology of 51
—— favored by weakliness..... 52
—— —— bad air..... 52
—— is not strong-sight..... 53
—— dangerous tendency of..... 53
—— Harlan on..... 54
—— caused by fine work, etc..... 57
—— statistics..... 57, 59
——increasing 59
—— effect on character..... 60
—— what is lost by it..... 60
—— should be corrected by glasses in children..... 60
—— as related to compulsory education..... 59, 60
—— related to spinal curvature.. 74
Necrosis from phosphorus..... 116
Nervous system injured in schools 14, 18, 100
Neufchâtel, statistics of distorted spine 37
Neuralgia from use of sewing-machine..... 130
New York, statistics of near-sight..... 58
Nitrogen in mines..... 123

OPHTHALMIA..... 63
Over-study, signs of..... 16, 19

PAGE

Over-study described..... 17
—— defined..... 28
Over-use of organs..... 127–132

PAINTERS..... 114
Paper, tint of..... 56
Paris Exposition of 1878, contrivances to prevent accidents. 135
Phosphorus..... 116
Pianists..... 129
Piano, bad position at..... 64
Play, city children deprived of.. 27, 38, 39
—— advantages of..... 38
—— when injurious..... 38, 39
—— when inferior to gymnastics 39
—— recommended 101
Play-grounds..... 43, 94
Pneumonia. 109
Poisons and dust, effect of inhaling 107–119
Porcelain-makers..... 110
Position in reading..... 55
—— —— sitting..... 67–69
—— faulty in writing, etc., as related to spinal curvature 64, 73, 74
—— in writing..... 68, 70
—— should be frequently varied. 70
Potassium bichromate..... 115
Primary schools..... 32
Principles of education..... 7–13
Print, bad 56
Printers..... 114
Private schools..... 98–101
Prizes to school-children..... 16
Professions, duration of life in 142–144
Putnam, J. J., on gymnastics 38, 40

RADIATION..... 87
Recesses in school..... 47, 62
Reading, position in 55
—— while sleepy..... 56
Regulation of hours of labor 136–141
Religion not taught by the State 8
Repair of brain and other organs 28
Rest of eyes during study..... 54
Restrictions on labor of women and children 118, 119, 134, 137, 139
Rheumatism..... 109, 120, 124

SABBATH..... 35

	PAGE
Sailors	126
Sales-people	132
Scheele's green	113
School-house, site	94, 95
—— height	95
School-room, a model	79–84
—— shape, dimensions	79, 80
Schweinfurt green	113
Seamstresses	129
Seats and desks	64–78
—— faulty construction	65, 66
—— principles of construction	66–78
—— Liebreich's	67, 77
—— German	67
—— table of dimensions	76
—— Varrentrapp's model	75
—— should not be ranged in semi-circle	82
Sedentary life	131, 132
Sewerage of schools	96
Sewing-machines	130
Sex in education	26
Shades to windows	82
Shaftesbury, Lord, legislation	144
Shoemakers	131
Short-sight. See Near-sight.	
Singers	131
Slates	57
Sleep, loss of, a sign of over-study	16, 19
Sleepiness after meals	21, 22
—— should forbid reading	56
"Slow sight"	55
Society, injurious effect on school girls	26
Soldiers	125
Speakers	131
Spectacles. See Glasses.	
Spinal distortion in girls	36, 38
—— at Neufchâtel, etc	37
—— prevented by gymnastics	38
—— Buckminster Brown on origin of	64
—— related to bad position in reading and writing	64
—— connected with school-seats	68
—— Liebreich on	74
Standing at work	132
State, duty of, in education	8–10
Statistics of schools	15
—— of spinal deformity	37
—— of near-sight	57–59
—— of consumption from inhaling dust	108, 109
Statistics of accidents	133
—— of length of life	142–144
—— of health of factory-hands	140
—— Hirt's	142
—— Farr's	143
Steam-fan	91
—— heating	87
Stone-cutters	110
Stoves	87, 88
Strain, emotional, upon pupils	14
—— mental	15
Study before breakfast	20
—— in the afternoon	21
—— antagonism between study and meals	21, 22
—— interval between study and meals	20
—— amount of	28–33
—— excess. See Over-study	28
—— modern methods	29
—— in kindergartens	29, 33
—— Chadwick on	29, 31
—— wholesome	12
—— capacity for, at different ages	29–32
—— maximum average	31
—— at West Point	31
—— in colleges	32
—— in high-schools	32
—— by the half-time system	32
—— in kindergartens	33
—— in primary schools	33
—— with occasional rest of eyes	54
—— recesses in	62
—— See Education, Girls, Mental.	
Sulphate of quinia, manufacture of	115
Sulphuretted hydrogen	123
Sulphurous acid produced by burning gas	83
Sunlight in rooms	83
—— in schools	94
TAILORS	129, 131
Teachers, walking exercise	35
—— Sabbath rest for	35
—— of gymnastics, dearth of	40
—— —— in London	41
—— —— in Frankfort	42
—— —— special requirements for	45
—— —— for colleges	103

PAGE
Telegraph operators 129
Temperature of room..... 93
Theories of education..... 7–13
Tinting of walls..... 83
Tobacco..... 117
Trades, duration of life in... 142–144
Type..... 56, 57
Type-founders 114
Type-setters..... 129
Type-writing machine..... 130

URINALS for schools..... 96

VALVES for furnace..... 86
Varicose veins..... 132
Varrentrapp on size of school-room 79
Ventilation and heating..... 85–93
—— of closets..... 84
—— quality of air..... 86
—— by furnaces..... 86
—— by radiation..... 87
—— by steam and hot water..... 87
—— by stoves..... 87
—— auxiliary use of stove-funnel 88
—— by fireplace..... 88
—— amount required..... 89
—— expense of..... 90
—— by fan..... 90
—— by windows..... 91, 92
—— in private schools..... 98
—— of workshops.....109, 118
—— of mines..... 123, 124
Violinists 129

WALKING 34
—— for women..... 34, 35
Walking for scholars..... 101
—— for teachers..... 34
Wall-papers..... 84
Walls, tint of..... 83
Washing, to protect from dust... 118
Water-closets for schools..... 96
Water-supply for furnaces..... 87
Water, heating by..... 87
Watson, Wm., on accidents..... 133
Weakness of eyes after fevers.... 52
West Point, study at..... 31
White-damp..... 123
Windows..... 80–82
—— should be on one side of room 80
—— illuminating power..... 80
—— position..... 81
—— elevation..... 81
—— collective size..... 82
—— shades..... 82
—— ventilation by..... 91
—— in private houses..... 98
Women, exercise for..... 34, 35
—— special susceptibility to poison..... 116–118
—— legal restraint on labor..... 118, 134, 137–139
—— standing in shops..... 132
Woodbury's pen-holder..... 129
Work, proper amount of mental.. 16
Worry of mind..... 123
Wrist-drop..... 115
Writer's cramp..... 128, 129
Writing as connected with crooked spine..... 37
—— large hand..... 57
—— position in.....64, 68, 70
—— See Desks.

ZWEZ on size of school-room..... 79

THE END.

371.7 .L736
School and industrial hygiene
Stanford University Libraries
3 6105 042 803 838

371.7
L736
Basement

4507
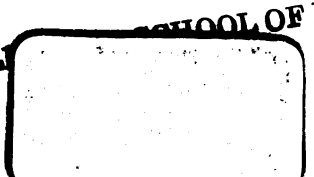
SCHOOL OF EDUCATION